GARDENA®

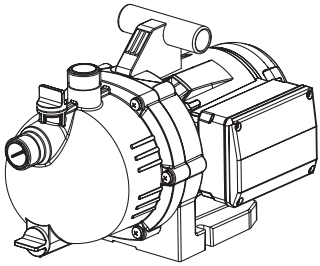

3000/3 Jet Art. 1704

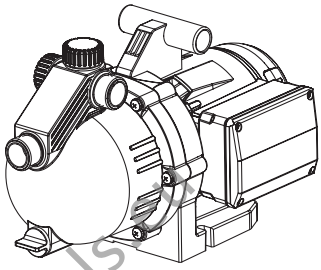

3000/4 Jet Art. 1706
3500/4 Jet Art. 1708

www.devicemanuals.eu

D **Gebrauchsanweisung**
Gartenpumpe

GB **Operating Instructions**
Garden Pump

F **Mode d'emploi**
Pompe de surface pour arrosage

NL **Gebruiksaanwijzing**
Besproeiingspomp

S **Bruksanvisning**
Bevattningspump

I **Istruzioni per l'uso**
Pompa da giardino

E **Manual de instrucciones**
Bomba para jardín

P **Instruções de utilização**
Bomba de Jardim

DK **Brugsanvisning**
Trykpumpe

GARDENA Garden Pump 3000/3 Jet / 3000/4 Jet / 3500/4 Jet

Welcome to the Garden of GARDENA ...

GB

Please read these operating instructions carefully and observe the notes given. Use these operating instructions to familiarise yourself with the Garden Pump, its correct use and the notes on safety.

For safety reasons, children under the age of 16 as well as persons not familiar with these operating instructions should not use this Garden Pump.

➔ Please keep these instructions in a safe place.

Contents:

1. Where to Use Your GARDENA Garden Pump. 10
2. Safety Instructions 11
3. Initial Operation 12
4. Operating 13
5. After Operation 13
6. Maintenance 14
7. Trouble-Shooting 14
8. Accessories 15
9. Technical Data 16
10. Service/Warranty 16

www.devicemanuals.eu

1. Where to Use Your GARDENA Garden Pump

Intended use:

The GARDENA Garden Pump is designed for domestic use around the house and garden.

When using the pump for pressure intensification, the max. permissible internal pressure of 6 bar (on the delivery side) must not be exceeded. The increased delivery pressure and the pump pressure have to be added together.

- Example: Pressure at the tap = 1.5 bar, maximum pressure of the Garden Pump 3000/3 Jet = 3.2 bar, total pressure = 4.7 bar.

Liquids that can be pumped:

The GARDENA Garden Pump can be used for pumping rainwater, tap water and chlorinated swimming pool water.

Please note:

The GARDENA Garden Pump is not suitable for continuous operation (e.g. industrial applications, continuous circulating operation). Corrosive, easily combustible, aggressive or explosive liquids (such as gasoline, petroleum or nitro thinner), saltwater and food must not be pumped. The temperature of the liquid must not exceed 35 °C.

2. Safety Instructions

DANGER ! Electric shock!

Risk of injury due to electric shock.

➔ **Always unplug your Garden Pump before filling, after operation, when trouble-shooting and before carrying out any maintenance work.**

RISK OF INJURY!
Hot water – risk of scalding!

If the pump is operated for prolonged periods of time (> 5 min) with the delivery side closed, the water in the pump may heat up so that there is a risk of scalding yourself with hot water.

➔ **The pump should not run against the closed delivery side for more than 5 minutes.**

➔ **If liquid fails to flow, switch off the pump immediately.**

Location

Caution: Pursuant to DIN VDE 0100-702 and 0100-738 use of the pump nearby swimming pools and garden ponds and other similar places is only permissible if the pump is operated via a residual-current device (FI switch) with a residual current rating of m 30 mA. The pump must not be operated when there are persons in the swimming pool or garden pond.The pump must be located on solid, even ground, protected from flooding. Take care that the pump cannot fall into water. Position the pump at a safe distance (min. 2 m) from the liquid to be pumped. As an additional safety device an authorised safety switch can be used.

➔ Please ask your electrician for his advice.

When connecting the pump to the water supply system, the country-specific sanitary regulations must be observed to prevent water not of drinking water quality being drawn back in.

➔ Please consult a specialist for sanitary installations.

Extension cables

Date indicated on the type plate must match technical data of the mains supply.

Pursuant to DIN VDE 0620, power cable as well as extension cables must not have a smaller diameter than rubber sheathed cables described with letter symbols H05 RNF.

➔ Don't use the power cable for carrying the pump or for plugging off.

In Austria

In Austria, the electrical connections must be made according to ÖVE-EM 42, T2 (2000)/1979 § 22 based on § 2022. Pursuant to this regulation it's imperative to operate pumps for swimming pools and garden ponds exclusively via an isolating transformer.

➔ Please ask your electrician.

In Switzerland

In Switzerland mobile appliances which are used outdoors, must be connected via a residual-current device.

Visual check

➔ Before operating the pump, first make a visual cheek, if there is any damage of the pump (esp. regarding power cable and plug).

A damaged pump must not be used.

➔ In case of damage, please have the pump checked by our GARDENA Service Centre or by an authorised electrician.

Note

➔ Protect the pump from rain. Don't use the pump in wet or moist area

In order to avoid dry-running of the pump, take care that the end of the suction hose is always submerged into the liquid.

➔ Before each operation, fill the pump to overflowing with approx. 2 to 3 l of the liquid to be pumped!

Sand and other abrasive substances in the liquid cause in-creased wear and reduce the pump's output.

➔ Use a pump preliminary filter for pumping sandy liquids.

Pumping dirty water, e.g. stones, pine needles etc., can cause damage to the pump.

➔ Do not pump dirty water.

The minimum flow rate is 80 l/h (= 1.3 l/min). Watering accessories with lower rate must not be operated.

www.downemanuals.eu

3. Initial Operation

GB

Setting up your Garden Pump:

The site must be firm and solid in order to ensure safe and sturdy operating conditions for the pump.

➔ Position the pump at a safe distance (min. 2 m) from the liquid to be pumped.

Connecting hose to suction side:

Don't use any hose connection system fittings on the suction side! A vacuum-resistant suction hose must be used

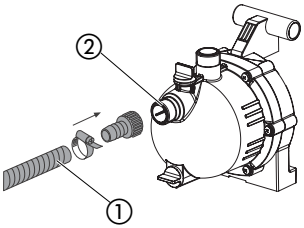

- e.g. GARDENA Suction Unit, **art. no. 1411**.

In order to reduce the suction time, it is advisable to use a suction hose with backflow preventer avoiding automatic draining of the suction hose when the pump is stopped.

1. Screw a vacuum-resistant suction hose airtight onto the connector ① on the suction side of the pump ②.
2. For suction heights exceeding 4 m also secure the suction hose ① (e.g. by fastening it to a wooden post).
   This relieves the pump of the weight of the suction hose.

Connection hose to delivery side:

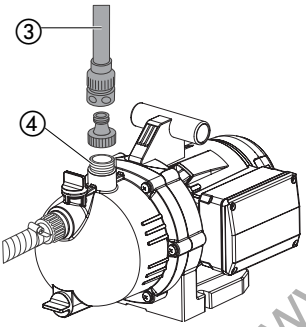

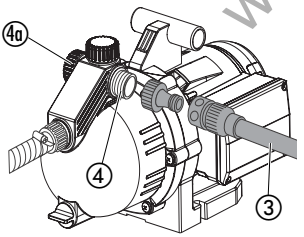

The two pumps 3000/4 Jet and 3500/4 Jet are equipped with 2 connections ④/④a on the pressure side. The rear pump connection ④a is closed with a cap that can be unscrewed to connect 2 hoses.

The pump connections ④/④a are equipped with a 33.3 mm (G 1") thread which can be used to connect 13 mm (1/2"), 16 mm (5/8") or 19 mm (3/4") hoses via the GARDENA hose connection system.

Best results regarding the delivery capacity of the pump are achieved when connecting 19 mm (3/4") hoses in conjunction with e.g.

- GARDENA Pump Connection Set, **art. no. 1752**,

or when using 25 mm (1") hoses with fittings available from your sanitary dealer.

➔ Connect the pressure hose to the connector ③ on the delivery side ④.

With parallel connection of more than 2 (3000/3 Jet more than 1) hoses/watering accessories we recommend the use of

- GARDENA Twin-Tap Connectors or Four-Channel Water Distributors **art. no. 1210/1194**,

which can be screwed directly onto the connection on the pressure side ④.

www.devicemanuals.eu

4. Operation

Filling the pump:

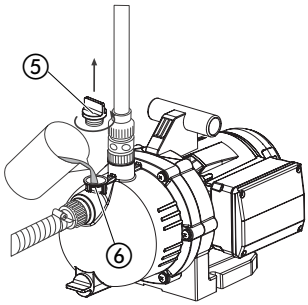

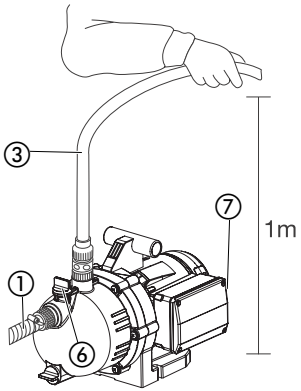

DANGER ! Electric shock !
Risk of injury due to electric shock.
➔ Disconnect from the mains before filling the Garden Pump.

ATTENTION! Dry-Running
➔ Before each operation, fill the pump to overflowing with approx. 2 to 3 l of the liquid to be pumped!

1. Unscrew the screw fitting ⑤ of the filler cap ⑥ by hand.
2. Fill the pump via the filler cap ⑥ to overflowing with approx. 2 to 3 l of the liquid to be pumped.
3. Tighten the screw fitting ⑤ of the filler cap ⑥ by hand (do not use pliers).
4. Open all possible shut-off devices in the pressure line (watering accessories, Water Stop, etc.).
5. Drain remaining water ③ in pressure hose so that air can escape during the suction process.
6. Set On/Off switch ⑦ to position **„0"** position.
7. Plug the pump into a 230 V / 50 Hz alternating current socket.
8. Set On/Off switch ⑦ to position **„1"** position.
9. Hold the pressure hose ③ approx. 1-2 m vertically above the pump until the pump begins to pump.

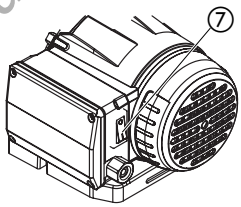

➔ If the pump does not deliver liquid after ca. 5 minutes, set the On/Off switch g) to position „0" (see 7. Trouble-Shooting).

The specified maximum self-priming height of 7 m is only achieved if the pump is filled via the filler neck ⑥ until it overflows and if the suction hose ① is held as high as possible while filling and during the self-priming procedure so that no liquid can escape from the pump via the suction hose ①.

www.downmanuals.eu

5. After Operation

Overwintering/Storage:

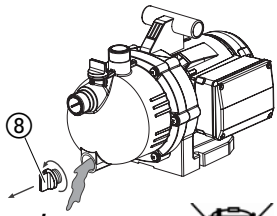

Before the start of the frost period the Garden Pump should be stored protected from frost.

1. Open the water drain screw ⑧.
   The Garden Pump drains.
2. Store your Garden Pump so that it is protected from frost.

Disposal:
(in accordance with directive 20002/96/EC)

The unit must not be disposed of with normal household waste but must be disposed of in accordance with local environmental regulations.

6. Maintenance

The GARDENA Garden Pump is essentially maintenance-free.

Flush through Garden Pump:

The pump must be flushed through after discharging chlorinated swimming pool water.

1. Pump through lukewarm water (max. 35 °C), possibly adding a mild cleaning agent (e.g. detergent) until the pumped water runs clear.
2. Remove residuals according to the waste disposal laws applicable in your area.

GB

7. Trouble Shooting

DANGER ! Electric shock !
Risk of injury due to electric shock.
➔ Disconnect Garden Pump from the mains before trouble-shooting

Free the impeller:

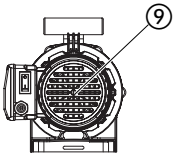

An impeller blocked by dirt can be freed again.

➔ Turn the impeller bolt ⑨ using a screwdriver.
This will free the blocked impeller.

Problem	Probable cause	Remedy
Pump runs, but the suction action doesn't take place.	Pump draws in air at a joint.	➔ Seal connections on suction side so are airtight.
	Leaky or damaged suction hose.	➔ Check suction line for damage and seal so is airtight.
	The pump was not filled with the liquid to be pumped.	➔ Fill the pump (see "**4. Operation**").
	The liquid escapes over the hose which is connected to the delivery side during the suction action.	1. Fill the pump again (see "**4. Operation**"). 2. When starting operation hold the pressure hose approx. 1 m vertically above the pump, until the suction action has taken place.
	Absolutely vacuum-resistant connection is achieved by using GARDENA Suction Hoses (see point **8. Accessories**).	
	Leaky screw fitting ⑤ at the filler cap ⑥.	➔ Check seal (replace if necessary) and tighten connection securely (do not use pliers).
	Air cannot escape, since delivery side is closed or remaining water is in the pressure hose.	➔ Open all possible shut-off devices (e.g. spray nozzle) in the pressure line, or drain the pressure hose or disconnect it during the suction action.
	The waiting time wasn't observed.	➔ Switch on the pump and wait ca. 5 min.
	Suction filter or backflow preventer in the suction hose clogged.	➔ Clean the filter or the back flow preventer.

www.devicemanuals.eu

	Too high suction height.	➔ Reduce suction height.
	In case of any other difficulties concerning the suction action, use GARDENA Suction Hoses with Backflow Preventer (see point **8. Accessories**) and fill in the liquid to be pumped over the filler cap ⑥ before operation.	
Pump motor runs, but delivery capacity or pressure suddenly decreases.	Suction filter at the suction hose is sucked free.	➔ Reduce flow rate on the delivery side with a control valve, e.g. GARDENA **art. no. (2)977**.
	Suction filter or backflow preventer clogged.	➔ Clean filter or back-flow preventer.
	Leaks at suction side.	➔ Eliminate leak.
	Impeller blocked.	➔ Release impeller.
Pump motor doesn't start or suddenly stops.	No power.	➔ Check fuses and electric connections.
	Thermal overload switch has cut out the pump due to overheating/overloading.	➔ Ensure sufficient cooling / ventilation and clean the impeller chamber.
	Electric failure.	➔ Send the pump to one of our GARDENA Service Centres.

If you have any other problem with your Garden Pump, please contact our Customer Service.

8. Accessories

GARDENA Suction Hoses	Kink- and vacuum-resistant, sold by the metre with 19 mm (3/4") or 25 mm (1") diameter without fittings or in fixed length, complete with fittings.	
GARDENA Suction Hose Fittings		• **Art. no. 1723/1724**
GARDENA Suction Filter	To equip suction hoses with Backflow Preventer sold by the metre.	• **Art. no. 1726/1727/1728**
GARDENA Pump Preliminary Filter	Recommended for pumping sandy liquids.	• **Art. no. 1730/1731**
GARDENA Electronic Manometric Switch	Automatically cuts in and out the pump depending on the current operating pressure. With dry-running safety.	• **Art. no. 1739**
GARDENA Dry-Running Safety	Prevents the pump from damages in case of missing liquid.	• **Art. no. 1741**
GARDENA Bore Hole Suction Hose	For vacuum-resistant connection of the pump to boreholes or pipe networks. Length 0.5 m. With 33.3 mm (G1) female thread at both ends.	• **Art. no. 1729**

www.devicemanuals.eu

9. Technical Data

Typ	3000/3 Jet	3000/4 Jet	3500/4 Jet
Rated power	600 W	650 W	700 W
Max. delivery capacity	3,000 l/h	3,100 l/h	3,300 l/h
Max. pressure/Max. delivery head	3.2 bar/32 m	3.5 bar/35 m	4.0 bar/40 m
Max. self-priming suction height	7 m	7 m	7 m
Perm. internal pressure (delivery side)	6 bar	6 bar	6 bar
Voltage/Frequency	230 V AC/50 Hz	230 V AC/50 Hz	230 V AC/50 Hz
Connection cable	1.5 m; H05-RNF	1.5 m; H05-RNF	1.5 m; H05-RNF
Weight	6,1 kg	6,2 kg	6,5 kg
Noise level L_{WA}[1)]	Measured 82 dB (A) Guaranteed 84 dB (A)	Measured 82 dB (A) Guaranteed 84 dB (A)	Measured 82 dB (A) Guaranteed 84 dB (A)

[1)] Measuring method according to Directive 2000/14/EC

www.deximanuals.eu

10. Service/Warranty

Warranty

GARDENA guarantees this product for 2 years (from date of purchase).

This guarantee covers all serious defects of the unit that can be proved to be material or manufacturing faults. Under warranty we will either replace the unit or repair it free of charge if the following conditions apply:

- The unit must have been handled properly and in keeping with the requirements of the operating instructions.
- Neither the purchaser or a non-authorised third party have attempted to repair the unit.

As a wear part the impeller is not covered by the guarantee

This manufacturer's guarantee does not affect the user's existing warranty claims against the dealer/seller.

If a fault occurs with your Garden Pump, please return the faulty unit together with a copy of the receipt and a description of the fault, with postage paid to one of the GARDENA Service Centres listed on the back of these operating instructions.

D ***Produkthaftung***	Wir weisen ausdrücklich darauf hin, dass wir nach dem Produkthaftungsgesetz nicht für durch unsere Geräte hervorgerufene Schäden einzustehen haben, sofern diese durch unsachgemäße Reparatur verursacht oder bei einem Teileaustausch nicht unsere originale GARDENA Teile oder von uns freigegebene Teile verwendet wurden und die Reparatur nicht vom GARDENA Service oder dem autorisierten Fachmann durchgeführt wird. Entsprechendes gilt für Ergänzungsteile und Zubehör.
GB ***Product Liability***	We expressly point out that, in accordance with the product liability law, we are not liable for any damage caused by our units if it is due to improper repair or if parts exchanged are not original GARDENA parts or parts approved by us, and, if the repairs were not carried out by a GARDENA Service Centre or an authorised specialist. The same applies to spare parts and accessories.
F ***Responsabilité***	Nous vous signalons expressément que GARDENA n'est pas responsable des dommages causés par ses appareils, dans la mesure où ces dommages seraient causés suite à une réparation non conforme, dans la mesure où, lors d'un échange de pièces, les pièces d'origine GARDENA n'auraient pas été utilisées, ou si la réparation n'a pas été effectuée par le Service Après-Vente GARDENA ou l'un des Centres SAV agréés GARDENA. Ceci est également valable pour tout ajout de pièces et d'accessoires autres que ceux préconisés par GARDENA.
NL ***Productaansprakelijkheid***	Wij wijzen er nadrukkelijk op, dat wij op grond van de wet aansprakelijkheid voor producten niet aansprakelijk zijn voor schade ontstaan door onze apparaten, indien deze door onvakkundige reparatie veroorzaakt zijn, of er bij het uitwisselen van onderdelen geen gebruik gemaakt werd van onze originele GARDENA onderdelen of door ons vrijgegeven onderdelen en de reparatie niet door de GARDENA technische dienst of de bevoegde vakman uitgevoerd werd. Ditzelfde geldt voor extra-onderdelen en accessoires.
S ***Produktansvar***	Tillverkaren är inte ansvarig för skada som orsakats av produkten om skadan beror på att produkten har reparerats felaktigt eller om, vid reparation eller utbyte, andra än Original GARDENA reservdelar har använts. Samma sak gäller för kompletteringsdelar och tillbehör.
I ***Responsabilità del prodotto***	Si rende espressamente noto che, conformemente alla legislazione sulla responsabilità del prodotto, non si risponde di danni causati da nostri articoli se originati da riparazioni eseguite non correttamente o da sostituzioni di parti effettuate con materiale non originale GARDENA o comunque da noi non approvato e, in ogni caso, qualora l'intervento non venga eseguito da un centro assistenza GARDENA o da personale specializzato autorizzato. Lo stesso vale per le parti complementari e gli accessori.
E ***Responsabilidad de productos***	Advertimos que conforme a la ley de responsabilidad de productos no nos responsabilizamos de daños causados por nuestros aparatos, siempre y cuando dichos daños hayan sido originados por arreglos o reparaciones indebidas, por recambios con piezas que no sean piezas originales GARDENA o bien piezas no autorizadas por nosotros, así como en aquellos casos en que la reparación no haya sido efectuada por un Servicio Técnico GARDENA o por un técnico autorizado. Lo mismo es aplicable para las piezas complementarias y accesorios.
P ***Responsabilidade sobre o produto***	Queremos salientar que segundo a lei da responsabilidade do fabricante, nós não nos responsabilizaremos por danos causados pelo nosso equipamento, quando estes ocorram em decorrência de reparações inadequadas ou da substituição de peças por peças não originais da GARDENA, ou peças não autorizadas. A responsabilidade tornar-se-à nula também depois de reparações realizadas por oficinas não autorizadas pela GARDENA. Esta restrição valerá também para peças adicionais e acessórios.
DK ***Produktansvar***	Vi gør udtrykkeligt opmærksom på at i henhold til produktansvarsloven er vi ikke ansvarlige for skader forårsaget af vores udstyr, hvis det er på grund af uautoriserede reparationer eller hvis dele er skiftet ud og der ikke er anvendt originale GARDENA dele eller dele godkendt af os, eller hvis reparationerne ikke er udført af GARDENA-service eller en autoriseret fagmand. Det samme gælder for ekstra udstyr og tilbehør.

www.manuals.ee

D EU-Konformitätserklärung

MaschinenVerordnung (9. GSGVO) / EMVG / Niedersp. RL

Der Unterzeichnete GARDENA Manufacturing GmbH · Hans-Lorenser-Straße 40 · D-89079 Ulm bestätigt, dass die nachfolgend bezeichneten Geräte in der von uns in Verkehr gebrachten Ausführung die Anforderungen der harmonisierten EU-Richtlinien, EU-Sicherheitsstandards und produktspezifischen Standards erfüllen. Bei einer nicht mit uns abgestimmten Änderung der Geräte verliert diese Erklärung ihre Gültigkeit.

GB EU Certificate of Conformity

The undersigned GARDENA Manufacturing GmbH · Hans-Lorenser-Str. 40 · D-89079 Ulm hereby certifies that, when leaving our factory, the units indicated below are in accordance with the harmonised EU guidelines, EU standards of safety and product specific standards. This certificate becomes void if the units are modified without our approval.

F Certificat de conformité aux directives européennes

Le constructeur, soussigné : GARDENA Manufacturing GmbH · Hans-Lorenser-Str. 40 · D-89079 Ulm déclare qu'à la sortie de ses usines le matériel neuf désigné ci-dessous était conforme aux prescriptions des directives européennes énoncées ci-après et conforme aux règles de sécurité et autres règles qui lui sont applicables dans le cadre de l'Union européenne. Toute modification portée sur ce produit sans l'accord express de GARDENA supprime la validité de ce certificat.

NL EU-overeenstemmingsverklaring

Ondergetekende GARDENA Manufacturing GmbH · Hans-Lorenser-Str. 40 · D-89079 Ulm bevestigt, dat de volgende genoemde apparaten in de door ons in de handel gebrachte uitvoering voldoen aan de eis van, en in overeenstemming zijn met de EU-richtlijnen, de EU-veiligheidsstandaard en de voor het product specifieke standaard. Bij een niet met ons afgestemde verandering aan de apparaten verliest deze verklaring haar geldigheid.

S EU Tillverkarintyg

Undertecknad firma GARDENA Manufacturing GmbH · Hans-Lorenser-Straße 40 · D-89079 Ulm intygar härmed att nedan nämnda produkter överensstämmer med EU:s direktiv, EU:s säkerhetsstandard och produktspecifikation. Detta intyg upphör att gälla om produkten ändras utan vårt tillstånd.

I Dichiarazione di conformità alle norme UE

La sottoscritta GARDENA Manufacturing GmbH · Hans-Lorenser-Str. 40 · D-89079 Ulm certifica che il prodotto qui di seguito indicato, nei modelli da noi commercializzati, è conforme alle direttive armonizzate UE nonché agli standard di sicurezza e agli standard specifici di prodotto. Qualunque modifica apportata al prodotto senza nostra specifica autorizzazione invalida la presente dichiarazione.

E Declaración de conformidad de la UE

El que subscribe GARDENA Manufacturing GmbH · Hans-Lorenser-Str. 40 · D-89079 Ulm declara que la presente mercancía, objeto de la presente declaración, cumple con todas las normas de la UE, en lo que a normas técnicas, de homologación y de seguridad se refiere. En caso de realizar cualquier modificación en la presente mercancía sin nuestra previa autorización, esta declaración pierde su validez.

P Certificado de conformidade da UE

Os abaixo mencionados GARDENA Manufacturing GmbH · Hans-Lorenser-Str. 40 · D-89079 Ulm Por este meio certificam que ao sair da fábrica os aparelhos abaixo mencionados estão de acordo com as directrizes harmonizadas da UE, padrões de segurança e de produtos específicos. Este certificado ficará nulo se as unidades forem modificadas sem a nossa aprovação.

DK EU Overensstemmelse certificat

Undertegnede GARDENA Manufacturing GmbH · Hans-Lorenser-Str. 40 · D-89079 Ulm bekræfter hermed, at enheder listet herunder, ved afsendelse fra fabrikken, er i overensstemmelse med harmoniserede EU retningslinier, EU sikkerheds standarder og produkt specifikations standarder. Dette certifikat træder ud af kraft hvis enhederne er ændret uden vor godkendelse.

Bezeichnung des Gerätes:	Gartenpumpe
Description of the unit:	Garden pump
Désignation du matériel :	Pompe de surface pour arrosage
Omschrijving van het apparaat:	Elektrische pomp
Produktbeskrivning:	Bevattningspump
Descrizione del prodotto:	Pompa da giardino
Descripción de la mercancía:	Bomba para jardin
Descrição do aparelho:	Bomba de Jardin
Beskrivelse af enhederne:	Trykpumpe

Typ:		Art.-Nr.:	
Type:		Art. No.:	
Type :		Référence :	
Typ:	3000/3 Jet	Art. nr.:	1704
Typ:	3000/4 Jet	Art. nr.:	1706
Modello:	3500/4 Jet	Art.:	1708
Tipo:		Art. Nº:	
Tipo:		Art. Nº:	
Type:		Varenr.:	

EU-Richtlinien:		Harmonisierte EN:
EU directives:		DIN EN ISO 12100-1
Directives européennes :	98/37/EG	DIN EN ISO 12100-2
EU-richtlijnen:	89/336/EG	EN 60335-1
EU direktiv:	73/23/EG	EN 60335-2-41
Direttive UE:	93/68/EG	EN 55014-1
Normativa UE:	2000/14/EG	EN 61000-3-2
Directrizes da UE:		EN 61000-3-3
EU Retningslinier:		EN 61000-6-3

Schall-Leistungspegel:	gemessen / garantiert
Noise level:	measured / guaranteed
Puissance acoustique :	mesurée / garantie
Geluidsniveau:	gemeten / gegarandeerd
Ljudnivå:	uppmätt / garanterad
Livello rumorosità:	testato / garantito
Nivel sonoro:	medido / garantizado
Nível de ruido:	medido / garantido
Lydtryksniveau:	afmålt / garanti
3000/3 Jet	82 dB (A) / 84 dB (A)
3000/4 Jet	82 dB (A) / 84 dB (A)
3500/4 Jet	82 dB (A) / 84 dB (A)

Anbringungsjahr der CE-Kennzeichnung:	
Year of CE marking:	
Date d'apposition du marquage CE :	
Installatiejaar van de CE-aanduiding:	
CE-Märkningsår:	2006
Anno di rilascio della certificazione CE:	
Colocación del distintivo CE:	
Ano de marcação pela CE:	
CE-Mærkningsår:	

Peter Lameli

Ulm, den 01.06.2006	Technische Leitung
Ulm, 01.06.2006	Technical Dept. Manager
Fait à Ulm, le 01.06.2006	Direction technique
Ulm, 01-06-2006	Hoofd technische dienst
Ulm, 2006.06.01	Technical Director
Ulm, 01.06.2006	Direzione Tecnica
Ulm, 01.06.2006	Dirección Técnica
Ulm, 01.06.2006	Director Técnico
Ulm, 01.06.2006	Teknisk direktør

www.devicemanuals.eu

Pumpen-Kennlinie:

Performance characteristics

Courbes de performance

Prestatiegrafiek

Kapacitetskurva

Curva di rendimento

Curva característica de la bomba

Características de performance

Ydelses karakteristika

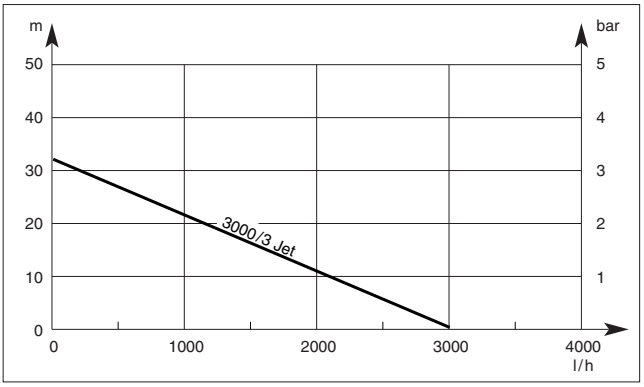

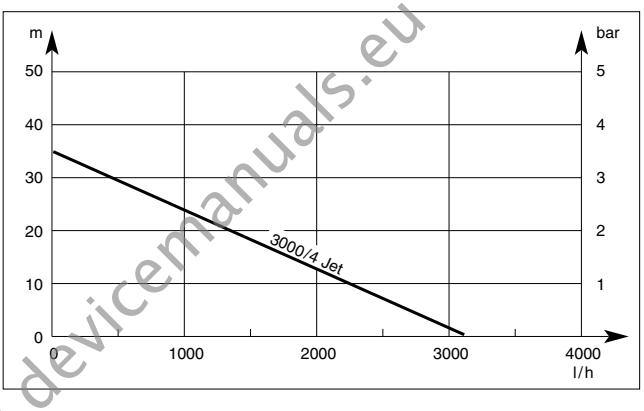

www.devicemanuals.eu

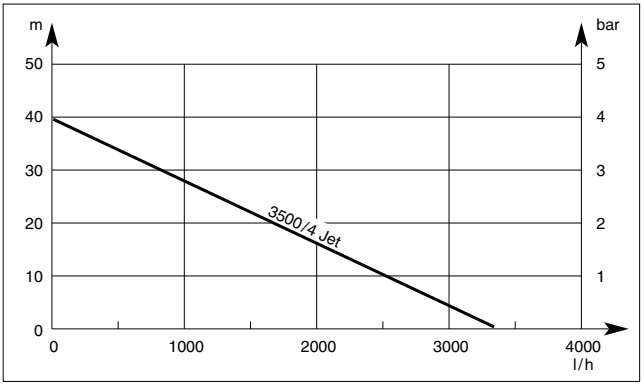

Deutschland / Germany
GARDENA Manufacturing GmbH
Service Center
Hans-Lorenser-Straße 40
D-89079 Ulm
Produktfragen: (+49) 731 490-123
Reparaturen: (+49) 731 490-290
service@gardena.com

Argentina
Argensem S.A. Calle Colonia Japonesa s/n - (1625) Loma Verde, Escobar, Buenos Aires
Phone: (+54) 34 88 49 40 40
info@argensem.com.ar

Australia
Nylex Consumer Products
50-70 Stanley Drive
Somerton, Victoria, 3062
Phone: 1800 658 276
spare.parts@nylex.com.au

Austria / Österreich
GARDENA Österreich Ges.m.b.H.
Stettnerweg 11-15
2100 Korneuburg
Tel.: (+43) 22 62 745 45-36 od. -30
kundendienst@gardena.at

Belgium
GARDENA Belgium NV/SA
Sterrebeekstraat 163
1930 Zaventem
Phone: (+32) 27 20 921 2
info@gardena.be

Brazil
Palash Comércio e Importação Ltda.
Rua Américo Brasiliense,
2414 - Chácara Sto Antonio
São Paulo - SP - Brasil -
CEP 04715-005
fone: 55 11 5181-0909
fax: 55 11 5181-2020

Bulgaria
Sofia 1404 Bulgaria
2 Luis Ahalier Str.
7th floor, DENEX LTD.
Phone: (+359) 2 9581821
office@denex-bg.com

Canada
GARDENA Canada Ltd. 100,
Summerlea Road Brampton,
Ontario, L6T 4X3
Phone: (+1) 905 792 93 30
info@gardenacanada.com

Chile
Antonio Martinic Y CIA. LTDA.
Gilberto Fuenzalida 185 Loc.
Las Condes, Santiago de Chile
Phone: (+56) 2 20 10 708
garfar_cl@yahoo.com

Costa Rica
Compania Exim Euroiberoamericana S.A. Los Colegios, Moravia, 200 metros al Sur del Colegio Saint Francis, San José, Costa Rica. Phone: (+506) 297 68 83
exim_euro@racsa.co.cr

Croatia
KLIS d.o.o.
Stančičeva 79
10419 Vukovina
Phone: (+385) 1 622 777 0
gardena@klis-trgovina.hr

Cyprus
FARMOKIPIKI LTD
P.O. Box 7098
74, Digeni Akrita Ave.
1641 Nicosia
Phone: (+357) 22 75 47 62
condam@spidernet.com.cy

Czech Republic
GARDENA spol. s.r.o.
Řípská 20a, č.p. 1153
62700 Brno
Phone: (+420) 800 100 425 (Hotline)
gardena@gardenabrno.cz

Denmark
GARDENA Norden AB
Box 9003, 200 39 Malmö, Sverige
info@gardena.dk

Finland
Habitec Oy, Martinkyläntie 52
01720 Vantaa

France
GARDENA France
Service Après-Vente
BP 50080
95948 ROISSY CDG Cedex
Tél.: (+33) 0826 101 455
service.consommateurs@gardena.fr

Great Britain
GARDENA UK Ltd.
27-28 Brenkley Way
Blezard Business Park
Seaton Burn
Newcastle upon Tyne NE13 6DS
info@gardena.co.uk

Greece
Agrokip G. Psomadopoulos & Co.
33 A, Ifestou str. – Industrial Area
Koropi 194 00, Athens
Phone: (+30) 210 66 20 225 /-226
info@agrokip.gr

Hungary
GARDENA Magyarország Kft.
Késmárk utca 22
1158 Budapest
Phone: (+36) 80 20 40 33 (Hotline)
gardena@gardena.hu

Iceland
Ó. Johnson & Kaaber
Tunguhalsi 1
110 Reykjavik

Ireland
Michael McLoughlin & Sons
Hardware Limited, Long Mile Road
Dublin 12

Italy
GARDENA Italia S.p.A.
Via Donizetti 22,
20020 Lainate (Mi)
Phone: 02.93.94.79.1
info@gardenaitalia.it

Japan
KAKUICHI Co. Ltd.
Yamato Bldg. 5-3-1
Kojimachi Chiyoda-ku.
Tokyo 102-0083
Phone: (+81)-(0)3-3264-4721
m_ishihara@kaku-ichi.co.jp

Luxembourg
Magasins Jules Neuberg
Boîte postale 12
L-2010 Luxembourg, rue Gluck
L-2549 Luxembourg-Gasperich
Phone. (+352) - 401 401
info@neuberg.lu

Netherlands
GARDENA Nederland BV
Postbus 50176
1305 AD ALMERE
Phone: (+31) 36 521 00 00
info@gardena.nl

Neth. Antilles
Jonka Enterprises N.V.
Sta. Rosa Weg 196
P.O. Box 8200, Curaçao
Phone: (+599) 9 767 66 55
pgm@jonka.com

New Zealand
NYLEX New Zealand Ltd.
Building 2
118 Savill Drive
Mangere, Auckland
Phone: (+64) 9 270 1806
lena.chapman@nylex.com.au

Norway
GARDENA Norden AB
Karihaugveien 89, 1086 Oslo

Poland
GARDENA Polska Sp. z o.o.
Szymanów 9d
05-532 Baniocha
Phone: (+48) 22 727 56 90
gardena@gardena.pl

Portugal
GARDENA, Lda.
Recta da Granja do Marquês
Edif. GARDENA Algueirão,
2725-596 Mem Martins
Phone: 219228530
info@gardena.pt

Romania
MADEX INTERNATIONAL SRL
Soseaua Odaii 117-123, sector 1
Bucuresti, RO 013603
Phone: (+40) 21 352 760 3/4/5/6
madex@ines.ro

Russia / Россия
АО АМИДА ТТЦ
ул. Мосфилмовская 66
117330 Москва
Phone: (+7) 095 956 99 00
amida@col.ru

Singapore
Hy-Ray Private Limited
40 JALAN PEMIMPIN
#02-08 Tat Ann Building
Singapore 577 185
Phone: (65) 6253 2277
hyray@singnet.com.sg

Slovak Republic
GARDENA Slovensko, s. r. o.
Panónska cesta 17
851 04 Bratislava
Phone: (+421) 263 453 722
info@gardena.sk

Slovenia
SILK d.o.o., Brodišče 15, 1236 Trzin
Phone: (+386) 1 580 93 00
gardena@silk.si

South Africa
GARDENA South Africa (Pty.) Ltd.
P.O. Box 11534, Vorna Valley 1686
Phone: (+27) 11 315 02 23
sales@gardena.co.za

Spain
GARDENA IBÉRICA S.L.
C/Basauri, nº 6
La Florida, 28023 Madrid
Phone: (+34) 91 708 05 00 (4 líneas)
atencioncliente@gardena.es

Sweden
GARDENA Norden AB
Box 9003, 20039 Malmö
info@gardena.se

Switzerland / Schweiz
GARDENA Schweiz AG
Bitziberg 1, 8184 Bachenbülach
Tel.: (+41)-848 800 464
info@gardena.ch

Turkey
GARDENA/Dost Diş Ticaret
Mümessillik A.Ş. Sanayi
Çad. Adil Sokak No. 1
Kartal - Istanbul

Ukraine
ALTSEST JSC
4 Petropavlivska Street
Petropavlivska Borschahivka Town
Kyivo Svyatoshyn Region
08130 Ukraine
Phone: +380 44 4595703
upyr@altsest.kiev.ua

USA
Melnor, 3085 Shawnee Drive
Winchester, VA 22604
Phone: (540) 722-9080
service_us@melnor.com

1704-20.960.01/0606
© GARDENA Manufacturing GmbH
D-89070 Ulm
http://www.gardena.com

www.devicemanuals.eu