SIEMENS

Combi steam oven

CS656GB.7B

en User manual and installation instructions

Register your product on My Siemens and discover exclusive services and offers.
siemens-home.bsh-group.com/welcome

The future moving in.

Siemens Home Appliances

Futher information and explanations are available online:

Table of contents

USER MANUAL

1 Safety ... 2
2 Preventing material damage ... 4
3 Environmental protection and saving energy ... 5
4 Familiarising yourself with your appliance ... 6
5 Operating modes ... 8
6 Accessories ... 9
7 Before using for the first time ... 11
8 Basic operation ... 12
9 Rapid heating ... 13
10 Time-setting options ... 14
11 Steam ... 15
12 Dishes ... 18
13 Childproof lock ... 19
14 Sabbath mode ... 20
15 Home Connect ... 20
16 Basic settings ... 22
17 Cleaning and servicing ... 22
18 Cleaning function ... 24
19 Cleaning assistance ... 25
20 Descaling ... 26
21 Drying ... 27
22 Appliance door ... 27
23 Rails ... 31
24 Troubleshooting ... 31
25 Disposal ... 33
26 Customer Service ... 34
27 Declaration of Conformity ... 34
28 How it works ... 35
29 INSTALLATION INSTRUCTIONS ... 42
29.1 General installation instructions ... 42

1 Safety

Observe the following safety instructions.

1.1 General information

- Read this instruction manual carefully.
- Keep the instruction manual and the product information safe for future reference or for the next owner.
- Do not connect the appliance if it has been damaged in transit.

1.2 Intended use

This appliance is designed only to be built into kitchen units. Read the special installation instructions.
Only a licensed professional may connect appliances without plugs. Damage caused by incorrect connection is not covered under the warranty.
Only use this appliance:

- To prepare meals and drinks.
- In private households and in enclosed spaces in a domestic environment.
- Up to an altitude of max. 2000 m above sea level.

1.3 Restriction on user group

This appliance may be used by children aged 8 or over and by people who have reduced physical, sensory or mental abilities or inadequate experience and/or knowledge, provided that they are supervised or have been instructed on how to use the appliance safely and have understood the resulting dangers.
Do not let children play with the appliance.
Children must not perform cleaning or user maintenance unless they are at least 15 years old and are being supervised.

Keep children under the age of 8 years away from the appliance and power cable.

1.4 Safe use

Always place accessories in the cooking compartment the right way round.
→ *"Accessories", Page 9*

⚠ WARNING – Risk of fire!

Combustible objects that are left in the cooking compartment may catch fire.
- Never store combustible objects in the cooking compartment.
- If smoke is emitted, the appliance must be switched off or the plug must be pulled out and the door must be held closed in order to stifle any flames.

Loose food remnants, fat and meat juices may catch fire.
- Before using the appliance, remove the worst of the food residues and remnants from the cooking compartment, heating elements and accessories.

Opening the appliance door creates a draught. Greaseproof paper may come into contact with the heating element and catch fire.
- Never place greaseproof paper loosely over accessories when preheating the appliance and while cooking.
- Always cut greaseproof paper to size and use a plate or baking tin to hold it down.

⚠ WARNING – Risk of burns!

The appliance and its parts that can be touched become hot during use.
- Caution should be exercised here in order to avoid touching heating elements.
- Young children under 8 years of age must be kept away from the appliance.

Accessories and cookware get very hot.
- Always use oven gloves to remove accessories or cookware from the cooking compartment.

When the cooking compartment is hot, any alcoholic vapours inside may catch fire.
- Only use small quantities of drinks with a high alcohol content in food.
- Open the appliance door carefully.

⚠ WARNING – Risk of scalding!

The accessible parts of the appliance become hot during operation.
- Never touch these hot parts.
- Keep children at a safe distance.

Hot steam may escape when you open the appliance door. Steam may not be visible, depending on the temperature.
- Open the appliance door carefully.
- Keep children at a safe distance.

If there is water in the cooking compartment when it is hot, this may create hot steam.
- Never pour water into the cooking compartment when the cooking compartment is hot.

⚠ WARNING – Risk of injury!

Scratched glass in the appliance door may develop into a crack.
- Do not use any harsh or abrasive cleaners or sharp metal scrapers to clean the glass on the oven door, as they may scratch the surface.

The appliance and its parts that can be touched may have sharp edges.
- Take care when handling and cleaning them.
- If possible, wear protective gloves.

The hinges on the appliance door move when the door is opened and closed, which could trap your fingers.
- Keep your hands away from the hinges.

Components inside the appliance door may have sharp edges.
- Wear protective gloves.

⚠ WARNING – Risk of electric shock!

Incorrect repairs are dangerous.
- Repairs to the appliance should only be carried out by trained specialist staff.
- Only use genuine spare parts when repairing the appliance.
- If the power cord of this appliance is damaged, it must be replaced by trained specialist staff.

If the insulation of the power cord is damaged, this is dangerous.
- Never let the power cord come into contact with hot appliance parts or heat sources.
- Never let the power cord come into contact with sharp points or edges.
- Never kink, crush or modify the power cord.

An ingress of moisture can cause an electric shock.
- Do not use steam- or high-pressure cleaners to clean the appliance.

If the appliance or the power cord is damaged, this is dangerous.
- Never operate a damaged appliance.
- Never pull on the power cord to unplug the appliance. Always unplug the appliance at the mains.
- If the appliance or the power cord is damaged, immediately unplug the power cord or switch off the fuse in the fuse box.
- Call customer services. → *Page 34*

⚠ WARNING – Danger: Magnetism!

Permanent magnets are used in the control panel or in the controls. These may affect electronic implants, e.g. heart pacemakers or insulin pumps.
- Wearers of electronic implants must stay at least 10 cm away from the control panel.

⚠ WARNING – Risk of suffocation!

Children may put packaging material over their heads or wrap themselves up in it and suffocate.
- Keep packaging material away from children.
- Do not let children play with packaging material.

Children may breathe in or swallow small parts, causing them to suffocate.
- Keep small parts away from children.
- Do not let children play with small parts.

1.5 Steam

Follow these instructions when using a steam function.

⚠ WARNING – Risk of scalding!

The water in the water tank may become very hot if you operate the appliance for long periods.
- Always empty the water tank after using the steam function.

Hot steam is generated in the cooking compartment.
- Do not reach into the cooking compartment when using steam.

Hot liquid may spill over the sides of the accessory when it is removed from the cooking compartment.
- Remove hot accessories with care and always wear oven gloves.

⚠ WARNING – Risk of fire!

Due to the hot surfaces, vapours from flammable liquids may catch fire in the cooking compartment (explosion). The appliance door may spring open. Hot steam and jets of flame may escape.
- Do not pour flammable liquids (e.g. alcoholic drinks) into the water tank.
- Only fill the water tank with water or with the descaling solution we have recommended.

1.6 Cleaning function

⚠ WARNING – Risk of burns!

⚠ The outside of the appliance gets very hot when the cleaning function is in progress.
- Never touch the appliance door.
- Allow the appliance to cool down.
- Keep children at a safe distance.

2 Preventing material damage

2.1 General

ATTENTION!

Objects on the cooking compartment floor at over 50 °C will cause heat to build up. The baking and roasting times will no longer be correct and the enamel will be damaged.
- Do not place any accessories, greaseproof paper or foil of any kind on the cooking compartment floor.
- Only place cookware on the cooking compartment floor if a temperature above 50 °C has been set.

When the cooking compartment is hot, any water inside it will create steam. The change in temperature may cause damage.
- Never pour water into the cooking compartment when it is still hot.
- Never place cookware containing water on the cooking compartment floor.

The prolonged presence of moisture in the cooking compartment leads to corrosion.
- Allow the cooking compartment to dry after use.
- Do not keep moist food in the cooking compartment for a long time with the door closed.
- Do not store food in the cooking compartment.

Leaving the appliance to cool down with the door open will damage the front of neighbouring kitchen units over time.
- ▸ Always allow the cooking compartment to cool down with the door closed after cooking at high temperatures.
- ▸ Take care not to trap anything in the appliance door.
- ▸ Only leave the cooking compartment to dry with the door open if a lot of moisture was produced during operation.

Fruit juice dripping from the baking tray leaves stains that cannot be removed.
- ▸ When baking very juicy fruit flans, do not pack too much on the baking tray.
- ▸ If possible, use the deeper universal pan.

Using oven cleaner in a hot cooking compartment damages the enamel.
- ▸ Never use oven cleaner in the cooking compartment when it is still warm.
- ▸ Remove all food remnants from the cooking compartment and the appliance door before you next heat up the appliance.

If the seal is very dirty, the appliance door will no longer close properly during operation. This may damage the front of adjacent kitchen units.
- ▸ Keep the seal clean at all times.
- ▸ Never operate the appliance if the seal is damaged or missing.

Sitting or placing objects on the appliance door may damage it.
- ▸ Do not place or hang objects on the appliance door.
- ▸ Do not place cookware or accessories on the appliance door.

With certain models, accessories may scratch the door pane when closing the appliance door.
- ▸ Always push accessories fully into the cooking compartment.

2.2 Steam

Follow these instructions when using the steam function.

ATTENTION!

Silicone bakeware is not suitable for combined operation with steam.
- ▸ Cookware must be heat- and steam-resistant.

Using cookware with rust spots may cause corrosion in the cooking compartment. Even the smallest spots of rust can cause corrosion.
- ▸ Do not use cookware with rust spots.

Dripping liquids make the cooking compartment floor dirty.
- ▸ When steaming with a perforated cooking container, always place the baking tray, the universal pan or the unperforated cooking container underneath. This will catch any liquid that drips down.

Hot water in the water tank may damage the steam system.
- ▸ Only fill the water tank with cold water.

If there is water on the cooking compartment floor when operating the appliance at temperatures above 120 °C, this will damage the enamel.
- ▸ Do not use the appliance if there is water on the cooking compartment floor.
- ▸ Wipe away any water on the cooking compartment floor before operation.

If descaling solution comes into contact with the control panel or other delicate surfaces, it will damage them.
- ▸ Remove descaling solution immediately with water.

Cleaning the water tank in the dishwasher will damage it.
- ▸ Do not clean the water tank in the dishwasher.
- ▸ Clean the water tank with a soft cloth and standard washing-up liquid.

3 Environmental protection and saving energy

3.1 Disposing of packaging

The packaging materials are environmentally compatible and can be recycled.
- ▸ Sort the individual components by type and dispose of them separately.

3.2 Saving energy

If you follow these instructions, your appliance will use less power.

Only preheat the appliance if the recipe or the recommended settings tell you to do so.
- ■ Not preheating the appliance can reduce the energy used by up to 20%.

Use dark-coloured, black-coated or enamelled baking tins.
- ■ These types of baking tin absorb the heat particularly well.

Open the appliance door as little as possible during operation.
- ■ This maintains the temperature in the cooking compartment and eliminates the need for the appliance to reheat.

When baking multiple dishes, do so in succession or in parallel.
- ■ The cooking compartment is heated after baking the first dish. This reduces the baking time for the second cake.

If the cooking time is relatively long, you can switch the appliance off 10 minutes before the cooking time ends.
- ■ There will be enough residual heat to finish cooking the dish.

Remove any accessories that are not being used from the cooking compartment.
- ■ Accessories that are not being used do not need to be heated.

Allow frozen food to defrost before cooking.
- ■ This saves the energy that would otherwise be required to defrost it.

Note:
The appliance requires:
- A maximum of 2 W in networked standby mode
- A maximum of 1 W when the appliance is not connected to the network, with the display switched on
- A maximum of 0.5 W when the appliance is not connected to the network, with the display switched off

4 Familiarising yourself with your appliance

4.1 Control panel

You can use the control panel to configure all functions of your appliance and to obtain information about the operating status.

Note: On certain models, specific details such as colour and shape may differ from those pictured.

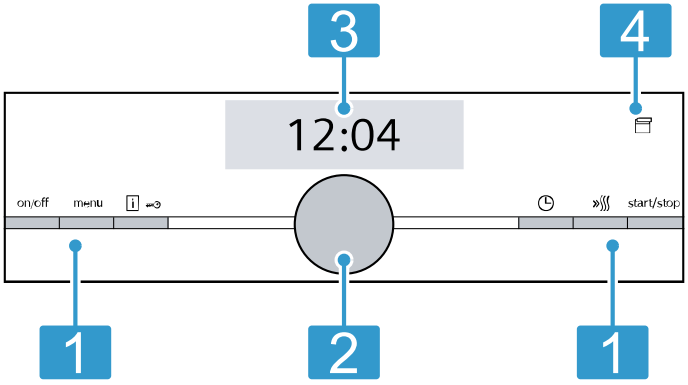

1	**Buttons** The buttons on the left- and right-hand side of the control panel have a pressure point. Press a button to execute its function. On appliances without a stainless steel front, the buttons are also touch fields.
2	**Rotary selector** You can turn the rotary selector without limits clockwise or anti-clockwise. Touch fields are touch-sensitive surfaces. To select a function, simply press lightly on the relevant field.
3	**Touch display** You can see the current selection options in the touch displays. To select a function, press directly on the corresponding field. The text fields change depending on the selection.
4	**Touch fields** Touch fields are touch-sensitive surfaces. To select a function, simply press lightly on the relevant field.

4.2 Buttons

Use the buttons on the left- and right-hand side of the control panel to switch your device or the operating mode on and off.

Button	Function	Use
on/off	On/off	Switch the appliance on or off.
menu	Menu	Open the operating mode menu
i	Information	Display notifications Activate and deactivate the childproof lock
i	Childproof lock	Activate and deactivate the childproof lock
	Time-setting options	Press briefly: Start or pause operation. Press and hold for approx. three seconds: Cancel operation.
	Rapid heat-up	Switch rapid heat-up on and off
start/stop	Start/stop	Start, pause or cancel the operation
	Opening the control panel	Open the control panel to remove the water tank.

4.3 Rotary selector

Use the rotary selector to change the setting values that are shown in the display.
If you have reached the minimum or maximum value for setting values, e.g. the temperature, this value remains in the display. If required, use the rotary selector to turn the value back again.
For lists, e.g. the types of heating, the first value starts again after the last value.

4.4 Display

The display shows the current setting values.
The value that you can change in the display is highlighted in colour.

Status bar

The status bar is at the top of the display.
The time and set time functions are shown in the status bar.

Progress line

The line is shown in the display below the highlighted value.
The progress line shows you how much the appliance has already heated up or how much time has elapsed. The line is filled from left to right.

Countdown

You can view the countdown time or the cooking time for the previous operation in the top right in the status bar.
If you have set a cooking time and the cooking time is deleted, the countdown time takes over from the time that has already elapsed from the cooking time. You can therefore always check how long the operation has already been running.

Temperature display

The heating-up control and the residual heat indicator show you the temperature in the cooking compartment. Due to thermal inertia, the temperature that is displayed may differ slightly from the actual temperature inside the cooking compartment. You can use the button to check the current temperature.

- Heating-up control
  After the operation starts, the heating-up indicator displays the rising temperature in the cooking compartment. When you are preheating the appliance, the optimal time to place your food in the cooking compartment is as soon as all the bars are filled. For set levels, e.g. for grill settings, the heating-up indicator is not displayed.
- Residual heat indicator
  When the appliance is switched off, the display shows the residual heat in the cooking compartment. The residual heat indicator goes out at approx. 60 °C.

4.5 Cooking compartment

The functions in the cooking compartment make your appliance easier to use.

Shelf supports

The rails in the cooking compartment enable you to place accessories at different heights.
→ *"Accessories", Page 9*
Your appliance has three shelf positions. The shelf positions are numbered from bottom to top.
You can remove the rails, e.g. for cleaning.
→ *"Rails", Page 31*

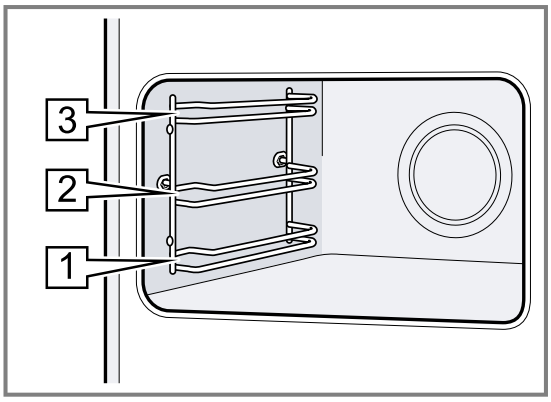

Self-cleaning surfaces

The self-cleaning surfaces in the cooking compartment are coated with a porous, matt ceramic layer and have a rough surface. When the appliance is in operation, the self-cleaning surfaces absorb splashes from roasting or grilling and break them down.
The following surfaces are self-cleaning:

- Back wall
- Ceiling
- Side walls

Use the cleaning function regularly to help retain the cleaning ability of the self-cleaning surfaces and prevent damage.
→ *"Cleaning function ", Page 24*

Lighting

One or more oven lights illuminate the cooking compartment.
When you open the appliance door, the light in the cooking compartment switches on. If the appliance door remains open for longer than 15 minutes, the light switches off again.
For most operating modes, the lighting is switched on during operation. The lighting switches off again when the operation ends.

Cooling fan

The cooling fan switches on and off depending on the appliance's temperature. The hot air escapes above the door.
ATTENTION!
Do not cover the ventilation slot above the appliance door. The appliance overheats.
- ▸ Ensure that the ventilation slots are unobstructed.

To ensure that the appliance cools down more quickly after operation, the cooling fan continues to run for a certain period afterwards.

Appliance door

If you open the appliance door during operation, the operation stops. When you close the appliance door, the operation continues automatically.

Water tank

You need the water tank for the types of steam heating. The water tank is behind the control panel.
→ *"Filling the water tank", Page 15*

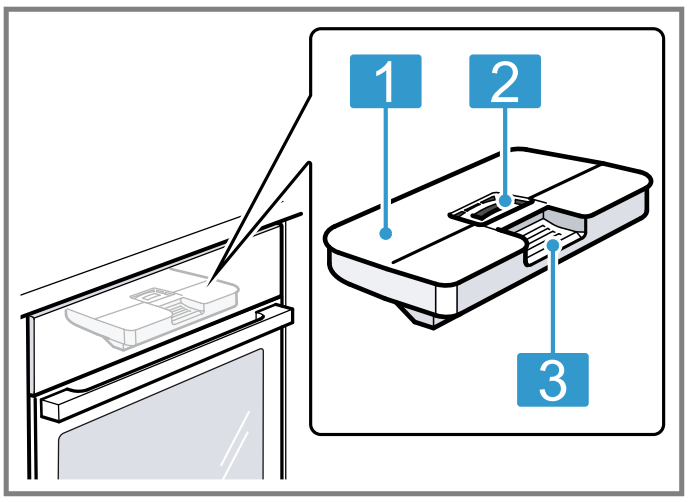

1	Tank cover
2	Opening for filling and emptying
3	Handle for removing and inserting

5 Operating modes

This is where you can find an overview of your appliance's operating modes and main functions.
Press menu to open the menu.

Operating mode	Use
Types of heating	Select finely tuned types of heating for the optimal preparation of your food. → *"Types of heating", Page 8*
Meals	Use programmed, recommended settings for various meals. → *"Dishes", Page 18*
Steam	Gently prepare food with types of steam heating.
Drying function	Use after every operation with steam or the microwave. → *"Drying", Page 27*
Descaling	You can use this to remove limescale from the evaporator. → *"Descaling", Page 26*
Cleaning function	The cleaning function cleans your oven almost automatically. → *"Cleaning function ", Page 24*
Basic settings	Adjust the basic settings. Basic settings → *Page 22*
Home Connect	Connect the oven to a mobile end device and remotely control it. → *"Home Connect ", Page 20*

5.1 Types of heating

To ensure that you always use the right type of heating to cook your food, we explain the differences and applications below.
The symbols for each type of heating help you to remember them.

When you select a type of heating, the appliance suggests a suitable temperature or setting. You can use these values or change them within the specified range.
For temperature settings above 275 °C and grill setting 3, the appliance reduces the temperature to approx. 275 °C or grill setting 1 after approx. 40 minutes.

Symbol	Type of heating	Temperature range	What it's used for and how it works Possible additional options
	4D hot air	30–250 °C	Bake and roast on one or more levels. The fan distributes the heat from the ring-shaped heating element in the back wall evenly around the cooking compartment.
	Top/bottom heating	30–250 °C	Traditionally bake or roast on one level. This type of heating is ideal for cakes with moist toppings. The heat is emitted evenly from above and below.
	Hot air eco	30–250 °C	Cook selected dishes gently on one level without preheating. The fan distributes the heat from the ring-shaped heating element in the back wall evenly around the cooking compartment. The food is cooked in phases using residual heat. This type of heating is most effective between 125 and 250 °C. Always keep the appliance door closed when cooking. This type of heating is used to determine the energy consumption in air recirculation mode and the energy efficiency class.
	Top/bottom heating eco	30–250 °C	Gently cook selected dishes. Heat is emitted from above and below. This heating function is most effective between 150 and 250 °C. This type of heating is used to measure the energy consumption in the conventional mode.
	Circulated air grilling	30–250 °C	Roast poultry, whole fish or larger pieces of meat. The grill element and the fan switch on and off alternately. The fan circulates the hot air around the food.

Symbol	Type of heating	Temperature range	What it's used for and how it works Possible additional options
	Grill, large area	Grill settings: 1 = low 2 = medium 3 = high	Grill flat items such as steak and sausages, or make toast. Gratinate food. The entire area below the grill element becomes hot.
	Grill, small area	Grill settings: 1 = low 2 = medium 3 = high	Grill small quantities, such as steak, sausages or toast. Gratinate small quantities of food. The central area below the grill element becomes hot.
	Pizza setting	30–250 °C	Cook pizza or dishes that require a lot of heat from below. The bottom heating element and the ring-shaped heating element in the back wall heat the cooking compartment.
	Slow cooking	70–120 °C	Slowly and gently cook seared, tender pieces of meat in uncovered cookware. The heat is emitted evenly from above and below at a low temperature.
	Bottom heating	30–250 °C	Final baking or cooking food in a bain marie. Heat is emitted from below.
	Keeping food warm	60–100 °C	Keep cooked food warm.
	Plate warming	30–70 °C	Plate warming.
	CoolStart function	30–250 °C	For quickly preparing frozen products at position 1. The temperature depends on the manufacturer's instructions. Use the highest temperature specified on the packaging. The cooking time is as specified, or shorter. Preheating is not useful.

5.2 Types of steam heating

This is where you can find an overview of the types of steam heating and their use.

Symbol	Type of heating	Temperature	Use
	Steam	30–100 °C	Cook vegetables, fish and side dishes. Juice fruit. Blanch food.
	Reheating	80–180 °C	Gently reheat plated meals and baked items. The steam ensures that the food does not dry out.
	Proving dough	30–50 °C	Allow yeast dough and sourdough to rise. The dough rises considerably more quickly than at room temperature. The surface of the dough does not dry out.
	Defrosting	30–60 °C	Gently defrost vegetables, meat, fish and fruit. Thanks to the moisture, the food does not dry out or use its shape.

6 Accessories

Use original accessories. These have been made especially for your appliance.

Note: Accessories may become deformed if they get hot. Deformation has no effect on function. As the accessory cools down, it will regain its original shape.

The accessories supplied may differ depending on the appliance model.

Accessories		Use
Wire rack	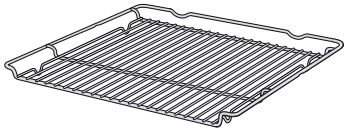	■ Cake tins ■ Ovenproof dishes ■ Cookware ■ Meat, e.g. roasting joints or steak ■ Frozen meals
Universal pan	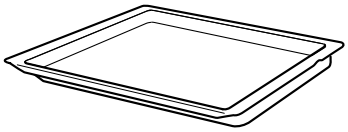	■ Moist cakes ■ Baked items ■ Bread ■ Large roasts ■ Frozen meals ■ Catch dripping liquids, e.g. fat when grilling food on the wire rack or water when cooking with steam.
Unperforated steam container, size S	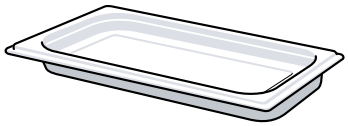	Cooking: ■ Rice ■ Pulses ■ Cereals Place the steam container on the wire rack.
Perforated steam container, size S	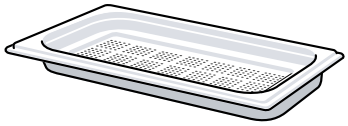	■ Steaming vegetables. ■ Juicing berries. ■ Defrosting. Place the steam container on the wire rack.
Perforated steam container, size XL		Steaming large quantities of food.

6.1 Information on accessories

Some accessories are only suitable for certain types of heating.

Steam container

The steam containers are suitable for steam-only types of heating up to 120 °C.
The steam containers are not suitable for higher temperatures or other types of heating. The containers become permanently discoloured and deformed.

6.2 Locking function

The locking function prevents the accessories from tilting when they are pulled out.
You can pull out the accessories approximately halfway without them tipping. The accessories must be inserted into the cooking compartment correctly for the tilt protection to work properly.

6.3 Sliding accessories into the cooking compartment

Always slide the accessory into the cooking compartment the right way round. This is the only way to ensure that accessories can be pulled out approximately halfway without tipping.

1. Turn the accessories so that the notch a is at the rear and is facing downwards.
2. Insert the accessory between the two guide rods for a shelf position.

Wire rack	Insert the wire rack with the open side facing the appliance door and the curved lip ⌣ facing downwards. 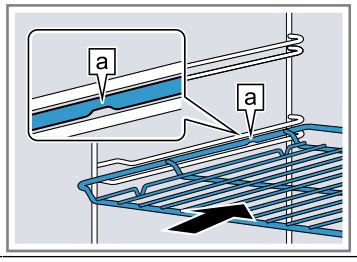
Baking tray E.g. universal pan or baking tray	Slide the tray in with the sloping edge b towards the appliance door. 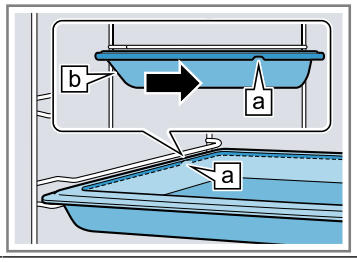

3. Push the accessory all the way in, making sure that it does not touch the appliance door.

Note: Take any accessories that you will not be using out of the cooking compartment while the appliance is in operation.

Combining accessories

You can combine the wire rack with the universal pan to catch any liquid that drips down.

1. Place the wire rack on the universal pan so that both spacers [a] are on the rear edge of the universal pan.
2. Insert the universal pan between the two guide rods for a shelf position. In so doing, the wire rack is on top of the upper guide rod.

Wire rack on universal pan

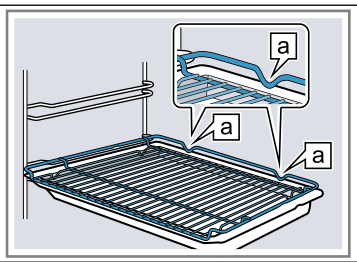

6.4 Other accessories

You can purchase other accessories from our after-sales service, specialist retailers or online.
You will find a comprehensive range of products for your appliance in our brochures and online:
www.siemens-home.bsh-group.com
Accessories vary from one appliance to another. When purchasing accessories, always quote the exact product number (E no.) of your appliance.
You can find out which accessories are available for your appliance in our online shop or from our after-sales service.

7 Before using for the first time

Implement the settings for the initial configuration. Calibrate the appliance. Clean the appliance and accessories.

7.1 Before using for the first time

Before using the appliance for the first time, ask your water supplier about the hardness of your tap water. To ensure that the appliance can reliably remind you to descale it when required, you must set your water hardness range correctly.

ATTENTION!

If the wrong water hardness has been set, the appliance cannot remind you to descale it at the right time.

- Set the water hardness correctly.

Using unsuitable liquids may damage the appliance.

- Do not use distilled water, highly chlorinated tap water (>40 mg/l) or other liquids.
- Only use cold, fresh tap water, softened water or non-carbonated mineral water.

Malfunctions may occur when using filtered or demineralised water. The appliance may request that you top up the water tank even though it may be full, or operation with steam is cancelled after approx. two minutes.

- If required, mix filtered or demineralised water with the bottled non-carbonated mineral water with a ratio of one to one.

Tip: If you use mineral water, set the water hardness range to "very hard". If you use mineral water, you must only use non-carbonated mineral water.

Tip: If your tap water is very hard, we recommend that you use softened water. If you use only softened water, you can set your appliance to the "softened" water hardness range.

Setting	Water hardness in mmol/l	German hardness in °dH	French hardness °fH
0 (softened)[1]	-	-	-
1 (soft)	Up to 1.5	Up to 8.4	Up to 15
2 (moderately hard)	1.5-2.5	8.4-14	15-25
3 (hard)	2.5-3.8	14-21.3	25-38
4 (very hard)[2]	Above 3.8	Above 21.3	Above 38

[1] Only set this if you will be using solely softened water.
[2] Also set for mineral water. Only use non-carbonated mineral water.

7.2 Carrying out the initial configuration

When the appliance is connected to the electricity supply for the first time or following a lengthy power cut, you must configure the settings before you can use it. It may take a few seconds for the settings to appear on the display.

Note: You can also enter the settings using the Home Connect assistant. In this case, press > to go to the last point in the initial configuration. If your appliance is connected, follow the instructions in the app.

Setting the language

1. Use the rotary selector to select the required language.
2. Press >.
✔ The next setting appears.

Setting the time

1. Turn the rotary selector to set the current time.
2. Press >.
✔ The next setting appears.

Setting the date

1. Use the rotary selector to set the current day.

2. Press >.
3. Use the rotary selector to set the current month.
4. Press >.
5. Use the rotary selector to set the current year.
6. Press >.

Setting the water hardness

1. Use the rotary selector to set the hardness.
2. Press >.
✔ A notification appears on the display confirming that the initial configuration is complete.

7.3 Calibrating and cleaning the appliance before using it for the first time

Calibrate the appliance and clean the cooking compartment and accessories before using it to prepare food for the first time.

Note: The boiling point of water depends on the air pressure. During calibration, the appliance self-adjusts during the first steam operation to the pressure ratio at the installation location.
Do not open the appliance door while calibration is in progress, as this will cancel the calibration process.

Requirement: The cooking compartment is cold or at room temperature.

1. Remove the product information and the accessories from the cooking compartment. Remove any leftover packaging, such as polystyrene pellets, and any adhesive tape either in or on the appliance.
2. Wipe the smooth surfaces in the cooking compartment with a soft, damp cloth.
3. Press on/off to switch the appliance on.
4. Fill the water tank.
5. Apply the following settings:

Type of heating	Steam
Temperature	100 °C
Cooking time	30 minutes

→ *"Basic operation", Page 12*

6. Press start/stop to start the operation.
   – Ventilate the kitchen while the appliance is heating.
✔ The calibration starts. This generates a lot of steam.
✔ When the cooking time has elapsed, a signal sounds and the duration is at zero on the display.
7. Allow the appliance to cool down and then dry the cooking compartment floor thoroughly.
8. **ATTENTION!**
   If there is water on the cooking compartment floor when operating the appliance at temperatures above 120 °C, this will damage the enamel.
   ▸ Do not use the appliance if there is water on the cooking compartment floor.
   ▸ Wipe away any water on the cooking compartment floor before operation.

   Apply the following settings:

Type of heating	4D hot air
Temperature	Maximum
Cooking time	30 minutes

→ *"Basic operation", Page 12*

9. Press start/stop to start the operation.
   – Ventilate the kitchen while the appliance is heating.
✔ When the cooking time has elapsed, a signal sounds and the duration is at zero on the display.
10. Press on/off to switch the appliance off.
11. Once the appliance has cooled down, clean the smooth surfaces in the cooking compartment with a detergent solution and a dish cloth.
12. Clean the accessories thoroughly using a detergent solution and a dish cloth or soft brush.
13. Empty the water tank and dry the cooking compartment.
    → *"Emptying the water tank", Page 17*

Note: Following a power cut, the calibrated settings are retained.
To adjust the appliance to a new installation location after moving house, reset the basic settings to the factory settings. Carry out the procedures for initial start-up and calibration again.

8 Basic operation

8.1 Switching on the appliance

▸ Press on/off to switch the appliance on.
  – The on/off button lights up blue.
✔ The Siemens logo appears in the display. A type of heating and a temperature are then displayed.

8.2 Switching off the appliance

Switch your appliance off when you are not using it. The appliance will switch itself off automatically if it is not used for a certain period of time.

▸ Press on/off to switch the appliance off.
  – The light above the on/off button goes out.
✔ The appliance switches off. Any functions currently in progress are cancelled.
✔ The time or residual heat indicator appears in the display.

8.3 Starting operation

You must start each cooking operation.

ATTENTION!
If there is water on the cooking compartment floor when operating the appliance at temperatures above 120 °C, this will damage the enamel.
▸ Do not use the appliance if there is water on the cooking compartment floor.
▸ Wipe away any water on the cooking compartment floor before operation.

▸ Press start/stop to start the operation.
✔ The settings, the run time and the heat-up line appear on the display.

8.4 Pausing or cancelling operation

You can briefly pause the operation and then continue. If you cancel the operation completely, the settings are reset.

1. To pause the operation briefly:
   – Briefly press start/stop.
   – To continue the operation, press start/stop.
2. To cancel the operation, press on/off.
✔ The operation stops and all of the settings are reset.

8.5 Setting an operating mode

Requirement: The appliance must be switched on.

1. Press menu.
   The operating modes menu opens.
2. Press the operating mode that you require.
   Various options are available depending on the operating mode.
3. The selection can be changed using the rotary selector.
   Change any further settings depending on the selection.
4. Press start/stop to start.

8.6 Setting the type of heating and the temperature

When you switch on the appliance, the types of heating operating mode is set automatically.

1. Turn the rotary selector to select the required type of heating.
2. Press the temperature.
3. Use the rotary selector to set the temperature.
4. Press start/stop to start the operation.
✔ The appliance starts heating.
✔ The set type of heating, temperature and cooking time/appliance run time are shown in the display.
5. When the food is ready, press on/off to switch the appliance off.

Tip: The most suitable type of heating for your food can be found in the type of heating description.

Note: You can also set a cooking time and an operation end time on the appliance.
→ *"Time-setting options", Page 14*

Changing the type of heating

When you change the type of heating, the other settings are also reset.

1. Press start/stop to pause operation.
2. Press the type of heating.
3. Turn the rotary selector to select the required type of heating.
✔ The corresponding recommended temperature appears on the display.

Changing the temperature

Once the operation has started, you can change the temperature directly.

▸ Use the rotary selector to change the temperature.
✔ The temperature is applied immediately.

8.7 Displaying information

In most cases, you can call up information about the function that you have just started. The appliance automatically displays certain information, e.g. to ask you to do/confirm something or to issue a warning.

▸ Press i.
✔ When available, information is displayed for a few seconds.

9 Rapid heating

To save time, you can shorten the preheating time for set temperatures of 100 °C and higher.
You can use rapid heating for this type of heating:

- 4D hot air
- Top/bottom heating

9.1 Setting rapid heating

To ensure an even cooking result, do not place the food in the cooking compartment until rapid heating has come to an end.

Note: Do not set a cooking time until rapid heating has come to an end.

1. Set a suitable type of heating and a temperature of at least 100 °C.
2. Press ».
✔ The » symbol appears on the left of the display next to the temperature.
✔ The progress line begins to fill up.
3. When rapid heating has come to an end, a signal tone sounds. The » symbol disappears from the display.
4. Place the food in the cooking compartment.

Cancelling rapid heating

▸ Press ».
✔ The » symbol disappears from the display.

10 Time-setting options

Your appliance has different time-setting options, with which you can control its operation.

10.1 Overview of the time-setting options

You can set a cooking time and an operation end time on the appliance. The timer runs independently of the appliance during the operation.

Time-setting option	Use
Timer 🔔	You can set the timer to run independently of the appliance during operation. It does not affect the appliance.
Cooking time ⊢⊣	If you set a cooking time, the appliance will stop heating automatically once this time has elapsed.
End time →⊣	Along with the cooking time (duration), you can set the time at which you want cooking to end. The appliance starts up automatically so that it finishes cooking at the required time.

10.2 Setting the timer

The timer runs independently during the operation. The timer can be set when the appliance is switched on or off, up to 24 hours. The timer has its own audible signal so that you can tell whether it is the timer or a cooking time that has elapsed.

1. Press ⏲.
✔ The field for the timer opens.
2. Use the rotary selector to set the timer duration.
✔ The timer starts automatically after a few seconds.
✔ The 🔔 symbol and the time counting down are displayed on the left in the status bar.
✔ The timer counts down.
✔ When the timer duration has elapsed, a note appears on the display and an audible signal sounds.
3. Once the timer duration has elapsed:
   – Press ⏲ to silence the audible signal manually.
   – To set another timer, press ⏲ and use the rotary selector to set the duration.

Changing the timer

You can change the timer duration at any time.

1. Press ⏲.
2. Use the rotary selector to change the timer duration.
3. Press ⏲ to confirm.

Cancelling the timer

You can cancel the timer duration at any time.

1. Press ⏲.
2. Use the rotary selector to reset the timer duration to zero.
3. Press ⏲ to confirm.

10.3 Setting the cooking time

You can set a cooking time for operation of up to 23 hours 59 minutes.

Requirement: The type of heating and a temperature or setting have been set.

1. Press ⏲.
✔ The time-setting options menu opens.
2. Use the rotary selector to set the cooking time.

Rotation direction	Default value
Left	10 minutes
Right	30 minutes

The cooking time can be set in one-minute increments up to one hour, and then in five-minute increments. The end time is calculated automatically.

3. Press start/stop to start the operation.
✔ The appliance starts to heat and the time starts to count down.
✔ Once the cooking time has elapsed, an audible signal sounds. "Finished" appears in the status bar.
4. Once the cooking time has elapsed:
   – Press ⏲ to silence the audible signal manually.
   – To set another cooking time, press ⏲ and use the rotary selector to set the cooking time.
   – To continue without setting a cooking time, press start/stop.
   – When the food is ready, press on/off to switch the appliance off.

Changing the cooking time

You can change the cooking time at any time.

1. Press ⏲.
2. Use the rotary selector to change the cooking time.
3. Then press start/stop twice.

Cancelling the cooking time

You can cancel the cooking operation time at any time.

1. Press ⏲.
2. Use the rotary selector to reset the cooking time to zero.
3. – To continue without setting a cooking time, press start/stop.
   The type of heating and temperature settings are shown in the display.

10.4 Setting the end time

You can delay the time at which cooking is due to finish by up to 23 hours and 59 minutes.

Notes

- In order to achieve good cooking results, do not delay the end time once the appliance is operating.
- Food will spoil if you leave it in the cooking compartment for too long.

Requirements

- The type of heating and a temperature or setting have been set.
- A cooking time is set.

1. Press ⏲.
2. Press →⊣.

3. To set a later end time, turn the rotary selector.
4. Press start/stop to start the operation.
✔ The status bar shows a notification when the operation starts. The appliance is in standby mode.
✔ Once the start time has been reached, the appliance starts heating and the cooking time starts counting down in the status bar.
✔ Once the cooking time has elapsed, an audible signal sounds. A notification appears in the status bar.
5. Once the cooking time has elapsed:
   – Press ⏲ to silence the audible signal manually.
   – To set another cooking time, press ⏲ and use the rotary selector to set the cooking time.
   – To continue without setting a cooking time, press start/stop.
   – When the food is ready, press on/off to switch the appliance off.

Cancelling the end time

The set end time can only be changed when the oven is in standby mode.

1. Press ⏲.
✔ The time-setting options menu opens.
2. Press →|.
3. Use the rotary selector to reset the end time to zero.
✔ The appliance starts to heat and the time starts to count down.

Changing the end time

The set end time can only be changed when the oven is in standby mode

1. Press ⏲.
✔ The time-setting options menu opens.
2. Press "→| end".
3. Turn the rotary selector to change the end time.
4. Press start/stop to resume operation.

11 Steam

Food can be cooked particularly gently using steam. You can use the special types of steam heating, or use steam assistance with certain types of heating.

⚠ **WARNING – Risk of scalding!**
Hot steam may escape when you open the appliance door. Steam may not be visible, depending on the temperature.
- Open the appliance door carefully.
- Keep children at a safe distance.

11.1 Filling the water tank

⚠ **WARNING – Risk of fire!**
Due to the hot surfaces, vapours from flammable liquids may catch fire in the cooking compartment (explosion). The appliance door may spring open. Hot steam and jets of flame may escape.
- Do not pour flammable liquids (e.g. alcoholic drinks) into the water tank.
- Only fill the water tank with water or with the descaling solution we have recommended.

⚠ **WARNING – Risk of burns!**
The water tank may heat up while the appliance is in operation.
- Wait until the water tank has cooled down from the previous operation.
- Remove the water tank from the tank recess.

Requirement: The water hardness must be set correctly.
→ *"Before using for the first time", Page 11*

1. Press ⊟.
✔ The control panel will pop out automatically.
2. Pull the control panel towards you with both hands and then push it upwards until it clicks into place ①.
3. Lift the water tank and remove it from the water tank recess ②.

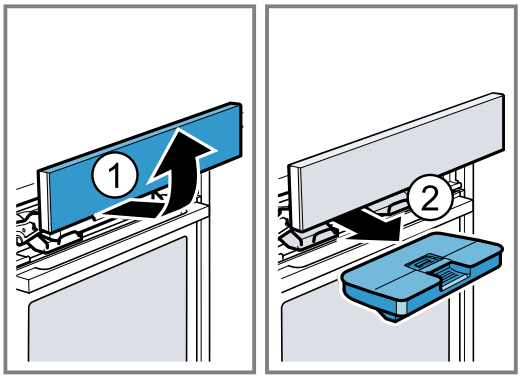

4. Press down on the water tank lid along the seal to prevent water from leaking out of the water tank.
5. Fill the water tank with water up to the "max" ⓐ mark.

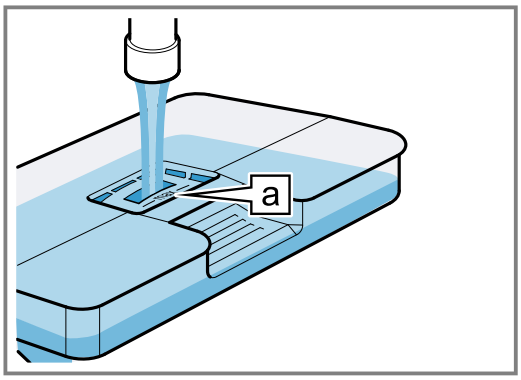

6. Slide the full water tank back into the recess ①. When doing so, make sure that the water tank clicks into place in the retainers ⓐ.

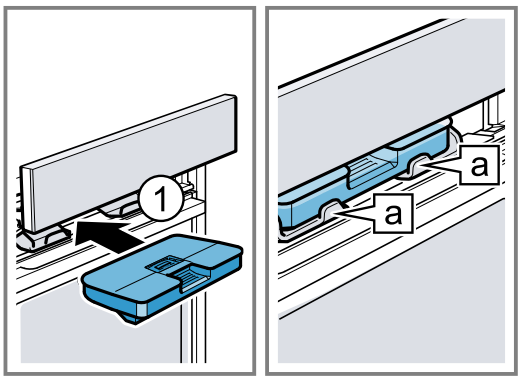

7. Slowly slide the control panel downwards and then push it away from you until it is closed completely.

11.2 Types of steam heating

A variety of types of steam heating are available for which hot steam is used to gently prepare food.

Steam

During steaming, hot steam surrounds the food to prevent it from losing nutrients. This cooking method also helps to retain the shape, colour and typical flavour of the food.

Dough proving

Yeast dough proves considerably more quickly using this function than at room temperature, and it will not dry out.

Reheating

The reheating function can be used to warm up food that has already been cooked, or bread and pastries from the day before.

Defrosting

Use the defrost setting to defrost deep-frozen and frozen products.

Setting the type of steam heating

Note:
Observe the instructions for the types of steam heating:
- → *"Types of steam heating", Page 16*
- A cooking time must always be set for steam heating.

Requirement: The water tank has been filled.
→ *"Filling the water tank", Page 15*

1. Press .
2. Press "Steaming".
3. Use the rotary selector to select the required steam type of heating.
4. Press the temperature.
5. Use the rotary selector to set the temperature.
6. Press the cooking time.
7. Use the rotary selector to set the cooking time.
8. Press start/stop to start the operation.

   Note: If the water tank runs dry during operation, a notification appears in the display. Operation is stopped.
   → *"Filling the water tank", Page 15*
   - ✔ The appliance starts to heat and the time starts to count down.
   - ✔ Once the cooking time has elapsed, an audible signal sounds. The time shown in the display is zero.
9. Once the cooking time has elapsed:
   - Press start/stop to silence the audible signal manually.
   - To set another cooking time, press the cooking time and use the rotary selector to set the value.
   - When the food is ready, press on/off to switch the appliance off.
10. Empty the water tank and dry the cooking compartment.
    → *"After every steam operation", Page 17*

Changing the type of heating

When you change the type of heating, the other settings are also reset.

1. Press start/stop to pause operation.
2. Press the type of heating.
3. Turn the rotary selector to select the required type of heating.
   - ✔ The corresponding recommended temperature appears on the display.

Changing the cooking time

You can change the cooking time at any time.

- ▸ Use the rotary selector to change the cooking time.
- ✔ The change is applied immediately.

Changing the temperature

You can change the temperature at any time.

1. Press the temperature.
2. Use the rotary selector to change the temperature.
   - ✔ The change is applied immediately.

11.3 Steam assistance

When you cook with steam assistance, the appliance introduces steam into the cooking compartment at various intervals. This gives your food a crispy crust and a shiny surface. Meat stays juicy, tender and only undergoes a minimum reduction in volume.

Suitable types of heating with steam-assisted cooking

Only certain types of heating are suitable for operation with steam-assisted cooking.
You can switch on steam assistance for the following types of heating:
- 4D hot air
- Top/bottom heating
- Circulated air grilling
- Keeping warm

Setting steam-assisted cooking

Requirement: The water tank has been filled.
→ *"Filling the water tank", Page 15*

1. Press menu.
2. In the operating modes menu, set the "Types of heating".
3. Use the rotary selector to set the type of heating.

4. Press the temperature.
5. Use the rotary selector to set the temperature.
6. Press the steam injection.
7. Use the rotary selector to set the steam injection.

Steam injection
Low
Medium
Heavy

8. Press start/stop to start the operation.
   Note: If the water tank runs dry during operation, a notification appears in the display. The appliance continues to operate without steam injection.
   → *"Filling the water tank", Page 15*
✔ The appliance starts heating.
✔ The time, the operation duration and the settings are shown in the display.
9. When the food is ready, press on/off to switch the appliance off.
10. Empty the water tank and dry the cooking compartment.
    → *"After every steam operation", Page 17*

Changing the type of heating

When you change the type of heating, the other settings are also reset.

1. Press start/stop to pause operation.
2. Press the type of heating.
3. Turn the rotary selector to select the required type of heating.

✔ The corresponding recommended temperature appears on the display.

Changing the temperature

You can change the temperature at any time.

- Use the rotary selector to change the temperature.

✔ The change is applied immediately.

11.4 After every steam operation

The remaining water is pumped back into the water tank after every operation with steam. Then empty and dry the water tank and the cooking compartment.

Emptying the water tank

⚠ **WARNING – Risk of burns!**

The water tank may heat up while the appliance is in operation.

- Wait until the water tank has cooled down from the previous operation.
- Remove the water tank from the tank recess.

ATTENTION!

Drying the water tank in the hot cooking compartment leads to damage to the water tank.

- Do not dry the water tank in the hot cooking compartment.

Cleaning the water tank in the dishwasher will damage it.

- Do not clean the water tank in the dishwasher.
- Clean the water tank with a soft cloth and standard washing-up liquid.

Note: Once the appliance has been switched off, the button remains lit for a little longer to remind you to empty the water tank.

1. Use to open the control panel.
2. Remove the water tank.
3. Carefully remove the lid of the water tank.
4. Empty the water tank, clean it with detergent and then rinse it thoroughly with clean water.
5. Dry all parts with a soft cloth.
6. Rub the seal on the lid until dry.
7. Leave the water tank to dry with the lid open.
8. Place the lid on the water tank and push down on it.
9. Insert the water tank and close the control panel.

Drying the condensation tray

⚠ **WARNING – Risk of burns!**

The appliance becomes hot during operation.

- Allow the appliance to cool down before cleaning.

Requirement: The cooking compartment has cooled down.

1. Open the appliance door.
2. **Note:**
   The condensation tray a is underneath the cooking compartment.

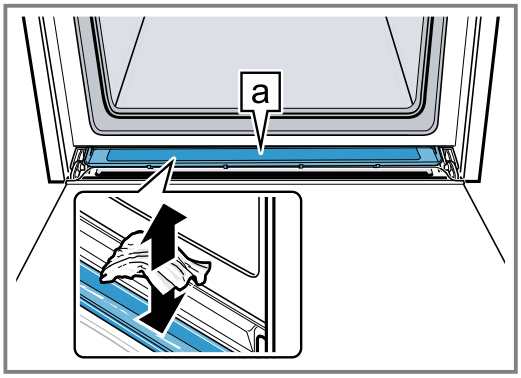

   Soak up the water in the condensation tray a with a tea towel and wipe it carefully.

Note: You can remove the condensation tray in order to clean it.
→ *"Removing the condensate tray", Page 28*

Drying the cooking compartment

Dry the cooking compartment after each steam operation.

- Dry the cooking compartment by hand or use the "Drying" function.
  → *"Drying", Page 27*

Drying the cooking compartment manually

⚠ **WARNING – Risk of burns!**

The appliance becomes hot during operation.

- Allow the appliance to cool down before cleaning.

ATTENTION!

If there is water on the cooking compartment floor when operating the appliance at temperatures above 120 °C, this will damage the enamel.

- Do not use the appliance if there is water on the cooking compartment floor.
- Wipe away any water on the cooking compartment floor before operation.

Requirement: The cooking compartment must have cooled down.

1. Remove any food remnants from the cooking compartment.
2. Dry the cooking compartment with a sponge.
3. Leave the cooking compartment to dry with the appliance door open for 1 hour.
4. Remove limescale marks with a cloth soaked in vinegar, then wipe with clean water and dry with a soft cloth.
5. Leave the appliance door open for 1-2 minutes so that the cooking compartment dries completely.

12 Dishes

The "Dishes" operating mode helps you to use your appliance to prepare different meals by selecting the optimum settings automatically.

12.1 Cookware

The cooking result depends on the composition of the meat and the size of cookware.
You should therefore use heat-resistant cookware that is suitable for temperatures up to 300 °C. Glass or glass ceramic cookware is best. The joint should cover approx. two thirds of the cookware base.
Cookware made from the following material is not suitable:

- Bright, shiny aluminium
- Unglazed clay
- Plastic or plastic handles

12.2 Settings for the dishes

To make the dishes perfectly, the appliance uses different settings.

Note: The cooking result depends on the quality and composition of the food. Use fresh and, ideally, chilled food. Use frozen food straight from the freezer.

Tips and information about the settings

If you set a dish, the display shows relevant information for this dish, e.g.:

- Suitable shelf position
- Suitable accessory or cookware
- Added liquid
- Time for turning or stirring
  When this time is reached, a signal sounds.

To call up the information, press "Tip" or ⓘ. Some notes are displayed automatically.

Programmes

The ideal type of heating, temperature and cooking time are preset for programmes.
In order to obtain an optimal cooking result, you must also set the weight. Unless otherwise indicated, set the total weight for your dish. You can set the weight only in the intended range.

Recommended settings

For the recommended settings, the optimum type of heating is preset. The display shows the type of heating.
You can adjust the preset temperature and the cooking time.

Steam dishes

The appliance automatically activates the steam function for certain dishes.
Take note of the information on the steam function.
→ *"Steam", Page 15*

12.3 Overview of the dishes

You can find out which individual dishes are available to you on the appliance when you call up the operating mode.
The dishes are sorted by categories and food.

Category	Foods
Cakes	Cakes in tins Cakes on a baking tray Small baked items Biscuits
Bread, bread rolls	Bread Bread rolls
Pizza, savoury cakes	Pizza Savoury cakes, quiche
Bakes, soufflés	Fresh lasagne Soufflés in individual molds Fruit crumble Yorkshire pudding
Frozen products	Pizza Bakes Potato products Poultry, fish Vegetables
Poultry	Chicken Duck, goose Turkey
Meat	Pork Beef Lamb Meat dishes
Fish	Fish, whole Fish fillets Fish dishes Seafood
Side dishes, vegetables	Vegetables Potatoes Rice Cereals Pulses Pasta, dumplings Eggs
Dessert, compote	Dessert, compote
Disinfecting	Sterilising bottles

Category	Foods
Reheating, crisping up	Vegetables Menu Baked items Side dishes
Defrosting food	Fruit, vegetables

12.4 Adjusting the dish

Note: Once it has started, you can no longer change or interrupt the dish or the settings.

Requirement: To start the operation, the cooking compartment must be cooled down.

1. Press menu.
2. In the operating modes menu, select "Dishes".
✔ The first dish is suggested.
3. Use the rotary selector to select the required category.
4. Press "Continue".
5. Use the rotary selector to select the required food.
6. Press "Continue".
7. Use the rotary selector to set the required dish.
8. Press "Continue".
9. Adjust the settings if required.
   – For some dishes, you can change the temperature, the cooking time or the end time by pressing "Adjust".
   – For some dishes, you can set the weight directly using the rotary selector.
10. For information about the accessory and shelf position, press "Tip".
11. Press start/stop to start the operation.
✔ The appliance starts to heat and the time starts to count down. The heating line does not appear.
✔ Once the dish is ready, a signal sounds. The appliance stops heating.
12. Once the cooking time has elapsed:
   – Press start/stop to silence the audible signal manually.
   – For some dishes, you can extend the cooking time if necessary.
   → *"Adding extra cooking time", Page 19*
   – When the dish is ready, press on/off to switch the appliance off.

Adding extra cooking time

For some dishes, the appliance allows you to extend the cooking time once the set cooking time has elapsed. You can do this as often as required.

1. If you do not want to extend the cooking time, press "End" and then to switch the appliance off.
2. To extend the cooking time, press "Continue cooking".
✔ A cooking time appears on the display.
3. If necessary, use the rotary selector to change the cooking time.
4. Press start/stop to start the operation.
✔ The appliance starts to heat and the time starts to count down.
✔ Once the cooking time has elapsed, an audible signal sounds. The appliance stops heating. The notification for extending the cooking time appears again.
5. Once the cooking time has elapsed:
   – Press start/stop to silence the audible signal manually.
   – If you want to extend the cooking time again, press "Continue cooking".
   – When the dish is ready, press "End" and use on/off to switch the appliance off.

13 Childproof lock

You can secure your appliance to prevent children from accidentally switching it on or changing the settings.

13.1 Activating and deactivating the childproof lock

You can activate and deactivate the childproof lock regardless of whether the appliance is switched on or off.

1. Press and hold i⊸ for approx. four seconds to activate the childproof lock.
✔ A confirmation notification appears on the display.
✔ The ⊸ appears in the status bar when the appliance is switched on or off.
2. Press and hold i⊸ for approx. four seconds to deactivate the childproof lock.
✔ A confirmation notification appears on the display.

14 Sabbath mode

You can set a cooking time of up to 74 hours using Sabbath mode. You can use top/bottom heating to keep food warm between 85 °C and 140 °C during this time without having to switch the appliance on or off.

14.1 Starting Sabbath mode

Notes

- If you open the appliance door during operation, the appliance stops heating. When you close the appliance door, the appliance continues to heat again.
- Once it has started, you can no longer change or interrupt Sabbath mode.

Requirement: Sabbath mode is activated in the basic settings.
→ *"Basic settings", Page 22*

1. Use the rotary selector to set the Sabbath mode type of heating ⊡.
2. Press the temperature.
   The temperature is preset to 85 °C.
3. Use the rotary selector to set the desired temperature.
4. Press ⏲.
   The time is preset to 25 hours.
5. Use the rotary selector to set the cooking time.
   The end time cannot be delayed.
6. Press start/stop to start the operation.
   ✔ The appliance starts to heat and the time starts to count down.
7. Once the cooking time has elapsed, an audible signal sounds. A note appears on the display confirming that the operation has finished. The appliance stops heating up and responds again as usual outside of Sabbath mode.
   – Press on/off to switch the appliance off.
   The appliance automatically switches off after approx. 10 to 20 minutes.

15 Home Connect

This appliance is network-capable. Connecting your appliance to a mobile device lets you control its functions via the Home Connect app, adjust its basic settings and monitor its operating status.
The Home Connect services are not available in every country. The availability of the Home Connect function depends on the availability of Home Connect services in your country. You can find information about this at: www.home-connect.com.
The Home Connect app guides you through the entire login process. Follow the instructions in the Home Connect app to configure the settings.

Tips

- Please consult the documents supplied by Home Connect.
- Please also follow the instructions in the Home Connect app.

Notes

- Please note the safety precautions in this instruction manual and make sure that they are also observed when operating the appliance via the Home Connect app.
  → *"Safety", Page 2*
- Operating the appliance on the appliance itself always takes priority. During this time it is not possible to operate the appliance using the Home Connect app.
- In networked standby mode, the appliance requires a maximum of 2 W.

15.1 Setting up Home Connect

Requirements

- The appliance is connected to the power supply and is switched on.
- You have a mobile device with a current version of the iOS or Android operating system, e.g. a smartphone.
- The mobile device and the appliance are within range of your home network's Wi-Fi signal.

1. Download the Home Connect app.

2. Open the Home Connect app and scan the following QR code.

3. Follow the instructions in the Home Connect app.

15.2 Home Connect Settings

You can adjust the settings and network settings for Home Connect by going to your appliance's basic settings. Which settings the display shows will depend on whether Home Connect has been set up and whether the appliance is connected to your home network.

Basic setting	Possible settings	Explanation
Wi-Fi	Switch on Switch off	If Wi-Fi is activated, you can use Home Connect. In networked standby mode, the appliance requires a maximum of 2 W.
Network	Connect to network Disconnect from network	If you disconnect the appliance from the network, all network information will be deleted. This setting is useful if you have new login details for the router.
Connect to app	-	This setting initiates the connection between the Home Connect app and the appliance.
Remote control	On Off	When this function is deactivated, all you can do is view the appliance's operating status in the app. When this function is activated, you can remotely start and control the appliance.
Appliance information ⓘ	-	The display shows information about the network or the appliance.

15.3 Operating the appliance with the Home Connect app

When the Remote start function is activated, you can use the Home Connect app to remotely configure the appliance's settings and start it.

Note: Some operating modes can only be started on the oven itself.

Requirements

- The appliance must be switched on.
- The appliance must be connected to your home network and to the Home Connect app.
- To configure the appliance's settings using the Home Connect app, "Remote control" must be switched on in the basic settings. When the Remote start function is deactivated, only the appliance's operating statuses are displayed in the Home Connect app.

1. Tap menu.
2. Tap "Remote start".
✔ The display will show ⌂.
3. Configure a setting in the Home Connect app and send it to the appliance.

   Notes

   - If you open the appliance door within 15 minutes of activating the Remote start function or of the set program ending, the Remote start function will be deactivated.
   - When you start the oven using the controls on the appliance itself, the Remote start function is activated automatically. You can use the Home Connect app to adjust the settings or start a new program.

15.4 Software update

Your appliance's software can be updated using the software update function, e.g. for the purposes of optimisation, troubleshooting or security updates.
To do this, you must be a registered Home Connect user, have installed the app on your mobile device and be connected to the Home Connect server.
As soon as a software update is available, you will be informed via the Home Connect app and will be able to start the software update via the app. Once the update has been successfully downloaded, you can start installing it via the Home Connect app if you are in your WLAN home network (Wi-Fi). The Home Connect app will inform you once installation is successful.

Notes

- You can continue to use your appliance as normal while updates are downloading. Depending on your personal settings in the app, software updates can also be set to download automatically.
- We recommend that you install security updates as soon as possible.

15.5 Remote diagnostics

Customer Service can use Remote Diagnostics to access your appliance if you contact them, have your appliance connected to the Home Connect server and if Remote Diagnostics is available in the country in which you are using the appliance.

Tip: For further information and details about the availability of Remote Diagnostics in your country, please visit the service/support section of your local website: www.home-connect.com

15.6 Data protection

Please see the information on data protection.
The first time your appliance is registered on a home network connected to the Internet, your appliance will transmit the following types of data to the Home Connect server (initial registration):

- Unique appliance identification (consisting of appliance codes as well as the MAC address of the Wi-Fi communication module installed).
- Security certificate of the Wi-Fi communication module (to ensure a secure data connection).
- The current software and hardware version of your appliance.
- Status of any previous reset to factory settings.

This initial registration prepares the Home Connect functions for use and is only required when you want to use the Home Connect functions for the first time.

Note: Please note that the Home Connect functions can only be utilised with the Home Connect app. Information on data protection can be retrieved in the Home Connect app.

16 Basic settings

You can configure the appliance to meet your needs.

16.1 Overview of the basic settings

Here you can find an overview of the basic settings and factory settings. The basic settings depend on the features of your appliance.

Basic setting	Selection
Language	See selection on the appliance.
Clock	Clock in 24-hour format.
Date – day	Sets the current day
Date – month	Sets the current month
Date – year	Sets the current year
Water hardness	0 (softened) 1 (soft) 2 (medium) 3 (hard) 4 (very hard)[1]
Signal tone	Short cooking time Medium cooking time[1] Long cooking time
Button tone	Switched on Switched off[1]
Display brightness	5 settings
Clock display	off Digital + date[1] Analogue
Lighting	Off during operation On during operation[1]
Childproof lock	Keylock only [1]
After switch-on	Main menu Types of heating[1] Steam Dishes
[1] Factory setting (may vary according to model)	

Basic setting	Selection
Night-time dimming	Switched off[1] Switched on
Brand logo	Display[1] Do not display
Fan run-on	Recommended[1] Minimum
Telescopic rails	Retrofitted [1] Not retrofitted
Sabbath mode	Switched on Switched off[1]
Home Connect	Home Connect Settings → *"Home Connect ", Page 20*
Factory setting	Reset
[1] Factory setting (may vary according to model)	

16.2 Changing the basic settings

1. Press on/off.
2. Press menu.
✔ The operating modes menu opens.
3. Select the "Settings" operating mode.
✔ The first basic setting appears.
4. Press > to switch between the different settings.
5. Use the rotary selector to change the basic setting.
6. Press menu.
✔ The display shows the changes "Save" or "Discard".
7. Press the required change.

Note: Your changes to the basic settings will be retained even after a power failure.

Discarding changes to the basic settings

1. Press menu.
2. Press "Discard" .
✔ All your changes are discarded and not saved.

17 Cleaning and servicing

To keep your appliance working efficiently for a long time, it is important to clean and maintain it carefully.

17.1 Cleaning products

In order to avoid damaging the various oven surfaces on the appliance, do not use unsuitable cleaning products.

⚠ **WARNING – Risk of electric shock!**

An ingress of moisture can cause an electric shock.

- Do not use steam- or high-pressure cleaners to clean the appliance.

ATTENTION!

Unsuitable cleaning products may damage the surfaces of the appliance.

- Do not use harsh or abrasive cleaning products.
- Do not use cleaning products with a high alcohol content.
- Do not use hard scouring pads or cleaning sponges.
- Do not use any special cleaners for cleaning the appliance while it is hot.

Using oven cleaner in a hot cooking compartment damages the enamel.

- Never use oven cleaner in the cooking compartment when it is still warm.
- Remove all food remnants from the cooking compartment and the appliance door before you next heat up the appliance.

New sponge cloths contain residues from production.

- Wash new sponge cloths thoroughly before use.

Suitable cleaning agents

Only use cleaning agents that are suitable for the different surfaces on your appliance.

Follow the instructions on cleaning the appliance.
→ *"Cleaning the appliance", Page 24*

Appliance front

Surface	Suitable cleaning agents	Information
Stainless steel	■ Hot soapy water ■ Special stainless steel cleaning products suitable for hot surfaces	To prevent corrosion, remove any limescale, grease, starch or albumin (e.g. egg white) stains on stainless steel fronts immediately. Apply a thin layer of the stainless steel cleaning product with a soft cloth.
Plastic or painted surfaces E.g. control panel	■ Hot soapy water	Do not use glass cleaner or a glass scraper. To avoid permanent stains, remove any descaling agent that gets onto the surface immediately.

Appliance door

Area	Suitable cleaning agents	Information
Door panels	■ Hot soapy water	Do not use a glass scraper or a stainless steel wool. **Tip:** Remove the door panels in order to clean them thoroughly. → *"Appliance door", Page 27*
Door cover	■ Made of stainless steel: Stainless steel cleaner ■ Made of plastic: Hot soapy water	Do not use glass cleaner or a glass scraper. Do not use stainless steel care products. **Tip:** Remove the door cover for thorough cleaning. → *"Appliance door", Page 27*
Stainless steel interior door frame	Stainless steel cleaner	Discolouration can be removed using stainless steel cleaner. Do not use stainless steel care products.
Door handle	■ Hot soapy water	To avoid permanent stains, remove any descaling agent that gets onto the surface immediately.
Door seal	■ Hot soapy water	Do not remove or scrub.

Cooking compartment

Area	Suitable cleaning agents	Information
Enamel surfaces	■ Hot soapy water ■ Vinegar water ■ Oven cleaner	Soak any heavily soiled areas and use a brush or steel wool. Leave the appliance door open to dry the cooking compartment after cleaning it. **Notes** ■ Enamel burns at very high temperatures, causing minor discolouration. The functionality of your appliance is not affected by this. ■ The edges of thin trays cannot be completely enamelled and may be rough. This does not impair corrosion protection. ■ Food residues will leave a white coating on the enamel surfaces. The coating does not pose a health risk. The functionality of your appliance is not affected by this. You can remove residues with lemon juice.
Self-cleaning surfaces	-	Follow the instructions for self-cleaning surfaces. → *"Cleaning self-cleaning surfaces in the cooking compartment", Page 24*
Glass cover for the oven light	■ Hot soapy water	Use oven cleaner to remove very heavy soiling.
Rails	■ Hot soapy water	Soak any heavily soiled areas and use a brush or steel wool. **Note:** To clean thoroughly, detach the rails. → *"Rails", Page 31*

Area	Suitable cleaning agents	Information
Accessories	■ Hot soapy water ■ Oven cleaner	Soak any heavily soiled areas and use a brush or steel wool. Enamelled accessories are dishwasher-safe. Do not use stainless steel wool on steam containers made from stainless steel. Use a vinegar solution to remove any dirt on stainless steel steam containers caused by starchy foods (e.g. rice).
Water tank	■ Hot soapy water	To remove residual detergent after cleaning, rinse thoroughly with clean water. To dry the water tank after cleaning, leave the water tank to dry with the lid open. Dry the seal on the lid. Do not clean in the dishwasher.

17.2 Cleaning the appliance

In order to avoid damaging the appliance, you must clean your appliance only as specified, and with suitable cleaning products.

⚠ **WARNING – Risk of burns!**
The appliance and its parts that can be touched become hot during use.
- ▸ Caution should be exercised here in order to avoid touching heating elements.
- ▸ Young children under 8 years of age must be kept away from the appliance.

⚠ **WARNING – Risk of fire!**
Loose food remnants, fat and meat juices may catch fire.
- ▸ Before using the appliance, remove the worst of the food residues and remnants from the cooking compartment, heating elements and accessories.

Requirement: Read the information on cleaning products.
→ *"Cleaning products", Page 22*

1. Clean the appliance using hot soapy water and a dish cloth.
   – For some surfaces, you can use alternative cleaning agents.
   → *"Suitable cleaning agents", Page 23*
2. Dry with a soft cloth.

17.3 Cleaning self-cleaning surfaces in the cooking compartment

The back panel, ceiling and side walls in the cooking compartment are self-cleaning and have a coarse surface.

ATTENTION!
If you do not clean the self-cleaning surfaces regularly, they may become damaged.
- ▸ If dark stains are visible on the self-cleaning surfaces, use the cleaning function to clean the cooking compartment.
- ▸ If a prompt to clean appears in the display, use the cleaning function to clean the cooking compartment.
- ▸ Do not use oven cleaner or abrasive cleaning aids. If oven cleaner accidentally comes into contact with the self-cleaning surfaces, dab it off immediately using water and a sponge cloth. Do not rub.
- ▸ Use the cleaning function.
  → *"Cleaning function ", Page 24*

18 Cleaning function

Use the cleaning function regularly to help retain the cleaning ability of the self-cleaning surfaces and prevent damage.
The self-cleaning surfaces in the cooking compartment are coated with a porous, matt ceramic layer and have a rough surface. When the appliance is in operation, the self-cleaning surfaces absorb splashes from roasting or grilling and break them down.
The following surfaces are self-cleaning:
- ■ Back wall
- ■ Ceiling
- ■ Side walls

ATTENTION!
If you do not clean the self-cleaning surfaces regularly, they may become damaged.
- ▸ If dark stains are visible on the self-cleaning surfaces, use the cleaning function to clean the cooking compartment.
- ▸ If a prompt to clean appears in the display, use the cleaning function to clean the cooking compartment.
- ▸ Do not use oven cleaner or abrasive cleaning aids. If oven cleaner accidentally comes into contact with the self-cleaning surfaces, dab it off immediately using water and a sponge cloth. Do not rub.

18.1 Cleaning recommendation

The appliance records the type and duration of the operation and, if required, recommends which cleaning function to use.
When you switch on the appliance, a notification appears in the display stating that you should use the cleaning function. Start the cleaning function as soon as possible.
You can use your appliance as normal. However, the cleaning setting appears in the display until you have run the cleaning function in full.

Note: If the appliance is prematurely contaminated, e.g. by greasy poultry or roasts, or if dark spots appear on the self-cleaning surfaces, do not wait until the notification appears in the display before you use the cleaning functions. The more often you use the cleaning function, the longer the cleaning ability of the self-cleaning surfaces is retained.

18.2 Preparing the appliance for the cleaning function

In order to achieve a good cleaning result, prepare the appliance carefully.

ATTENTION!

Using oven cleaner on the self-cleaning surfaces damages the surfaces.

- Do not use oven cleaner on the self-cleaning surfaces. If oven cleaner does get onto these surfaces, dab it off immediately using water and a sponge cloth. Do not rub the surface and do not use abrasive cleaning aids.

1. Remove accessories and cookware from the cooking compartment.
2. Detach the shelf supports and remove them from the cooking compartment.
   → *"Rails", Page 31*
3. Remove coarse dirt using soapy water and a soft cloth:
   – From the cooking compartment floor
   – From the inside of the appliance door
   – From the glass cover on the oven light
   This prevents stains that cannot be removed.
4. Remove any objects from the cooking compartment. The cooking compartment must be empty.

18.3 Setting the cleaning function

Ventilate the kitchen while the cleaning function is running.

⚠ **WARNING – Risk of burns!**

⚠ The outside of the appliance gets very hot when the cleaning function is in progress.

- Never touch the appliance door.
- Allow the appliance to cool down.
- Keep children at a safe distance.

Requirement: → *"Preparing the appliance for the cleaning function", Page 25*.

1. Press menu.
2. In the operating mode menu, select the "Cleaning function".
   ✔ The duration appears in the display. The duration of one hour cannot be changed.
3. Press start/stop to start.
   Note: Do not open the appliance door while the cleaning function is running. The cleaning result would no longer be correct and the operation is interrupted.
   ✔ The cleaning function starts and the duration counts down.
   ✔ When the cleaning function comes to an end, an audible signal sounds and a note appears in the display.
4. Press on/off to switch the appliance off.
5. → *"Wiping the appliance clean following the cleaning function", Page 25*.

18.4 Wiping the appliance clean following the cleaning function

1. Allow the appliance to cool down.
2. Wipe the cooking compartment with a damp cloth.
   Note: Marks may appear on the self-cleaning surfaces. Residues of sugar and egg white in the food are not removed and stick to the surfaces. Red stains are residues from salty food – they are not rust. The stains are not hazardous to health. These marks do not impair the cleaning ability of the self-cleaning surfaces.
3. Attach the shelf supports.
   → *"Rails", Page 31*

19 Cleaning assistance

The cleaning assistance is a quick alternative for occasionally cleaning the cooking compartment. The cleaning assistance softens dirt by vaporising the soapy water. It is then easier to remove dirt.

19.1 Setting the cleaning aid

⚠ **WARNING – Risk of scalding!**

If there is water in the cooking compartment when it is hot, this may create hot steam.

- Never pour water into the cooking compartment when the cooking compartment is hot.

Requirement: The cooking compartment has cooled down completely.

1. Remove the accessories from the cooking compartment.
2. Mix 0.4 litres water with a drop of washing-up liquid and pour into the centre of the cooking compartment floor.
   Do not use distilled water.
3. Press on/off.
   ✔ A type of heating and a temperature appears.
4. Use the rotary selector to set the bottom heat ⊟ type of heating.
5. Press the temperature.
6. Use the rotary selector to set the temperature to 80 °C.
7. Press ⏲.
8. Use the rotary selector to set the time to four minutes.
9. Press start/stop to start.
   ✔ The appliance starts to heat and the time starts to count down.

✔ Once the time has elapsed, an audible signal sounds. A message appears in the status bar.

10. Use on/off to switch the appliance off and leave the cooking compartment to cool for approx. 20 minutes.

19.2 Wiping down the cooking compartment

ATTENTION!
The prolonged presence of moisture in the cooking compartment leads to corrosion.

▸ After using the cleaning assistance, wipe the cooking compartment and allow it to dry completely.

Requirement: The cooking compartment must have cooled down.

1. Open the appliance door and remove the remaining water with an absorbent sponge cloth.
2. Clean the smooth surfaces in the cooking compartment with a dish cloth or a soft brush. Remove stubborn food remnants using a stainless steel scouring pad.
3. Remove limescale with a cloth soaked in vinegar. Then wipe with clean water and rub dry with a soft cloth (including under the door seal).
4. In order to dry the cooking compartment, leave the appliance door open in the detent position (approx. 30°) for approx. one hour.

20 Descaling

To ensure that your appliance continues to operate correctly, it must be descaled regularly.
How frequently you need to run the descaling programme will depend on the water hardness and how many times you have used the steam function. The appliance indicates when only another five or fewer steam-assisted operations are possible. If you do not carry out the descaling, you can no longer set any operation with steam.
Descaling comprises several steps and takes approx. 70–95 minutes:

- Descaling (approx. 55–70 minutes)
- First rinse cycle (approx. 9–12 minutes)
- Second rinse cycle (approx. 9–12 minutes)

For reasons of hygiene, the descaling programme must be run in full.
If descaling is interrupted, you can no longer set any operation. To ensure that the appliance is ready for operation again, carry out two rinse cycles.

20.1 Preparing descaling

ATTENTION!
The length of time for which the descaler is left to work is based on the recommended, liquid descaler. Other descalers may damage the appliance.

▸ Only use the liquid descaler recommended by us for the descaling programme.

If descaling solution comes into contact with the control panel or other delicate surfaces, it will damage them.

▸ Remove descaling solution immediately with water.

1. Mix the descaling solution:
   – 200 ml liquid descaler
   – 400 ml water
2. Open the control panel.
3. Remove the water tank and pour the descaling solution into it.
4. Once the descaling solution has been poured into the water tank, slide the tank back in.
5. Close the control panel.

20.2 Setting the descaling function

Requirement: → *"Preparing descaling", Page 26*

1. Press menu.
2. In the operating mode menu, select "Descaling".
✔ The duration appears in the display. The duration cannot be changed.
3. Press start/stop to start.
✔ The descaling programme starts and the duration counts down.
✔ Once the first part of the descaling programme has finished, an audible signal sounds. The appliance prompts you to rinse twice.
4. To rinse the appliance, for each rinse cycle:
   – Open the control panel and remove the water tank.
   – Thoroughly rinse the water tank and fill it with fresh water.
   – Slide in the water tank and close the control panel.
   – Use start/stop to start rinsing.
✔ A signal sounds when each rinse cycle has ended.
5. Once the second rinsing cycle is complete:
   – Empty and dry the water tank.
   → *"Emptying the water tank", Page 17*
   – Press on/off to switch the appliance off
✔ Descaling is complete and the appliance is ready for use.

21 Drying

To prevent residual moisture, dry the cooking compartment following operation.

ATTENTION!

If there is water on the cooking compartment floor when operating the appliance at temperatures above 120 °C, this will damage the enamel.

- Do not use the appliance if there is water on the cooking compartment floor.
- Wipe away any water on the cooking compartment floor before operation.

21.1 Drying the cooking compartment

You can dry the cooking compartment by hand or use the drying function.

1. Allow the appliance to cool down.
2. Remove dirt from the cooking compartment.
3. Wipe away the water in the cooking compartment.
4. Dry the cooking compartment.
   - Leave the appliance door open for one hour to dry the cooking compartment by hand.
   - In order to use the drying function, set the drying function.
     → *"Setting the drying process", Page 27*

Setting the drying process

1. Allow the appliance to cool down.
2. Remove coarse dirt from the cooking compartment and wipe away moisture from the cooking compartment floor.
3. Press menu.
4. In the operating mode menu, press the drying operating mode.
   The duration is set to 10:00 min. and cannot be changed.
5. Press start/stop to start the drying function.
   ✔ The appliance starts to dry and the duration counts down.
6. Once the duration has elapsed:
   - A message appears in the display.
   - Press start/stop to silence the audible signal before it is due to end.
   - Press on/off to switch the appliance off.

22 Appliance door

To clean the appliance door thoroughly, you can disassemble the appliance door.

22.1 Detaching the appliance door

⚠ **WARNING – Risk of injury!**

Components inside the appliance door may have sharp edges.

- Wear protective gloves.

The hinges on the appliance door move when the door is opened and closed, which could trap your fingers.

- Keep your hands away from the hinges.

1. Open the appliance door fully.
2. ⚠ **WARNING – Risk of injury!**
   When the hinges are not secured, they can snap shut with great force.
   - Make sure that the locking levers are always either fully closed or (when detaching the oven door) fully open.

   Open the locking levers on the left- and right-hand hinges.

Locking levers opened	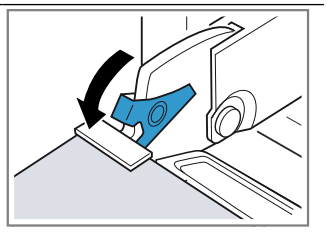 The hinge is now secured and cannot snap shut.
Locking levers closed	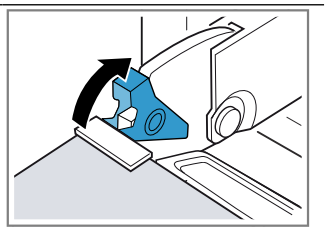 The appliance door is secured and cannot be detached.

✔ The locking levers are open. The hinges are now secured and cannot snap shut.

3. Close the appliance door fully ①. Grab hold of the appliance door with both hands (on the left and right) and pull it upwards and out ②.
4. Carefully place the appliance door on a level surface.

Removing the condensate tray

Notes

- Wipe down the condensate tray after every steam operation or before removing it.
- Do not clean the condensate tray in the dishwasher

Requirement: The appliance door must be removed.

1. Press on the left-hand pressure surface [a] ① until the hook is released.
2. Press on the right-hand pressure surface [b] ② until the hook is released.

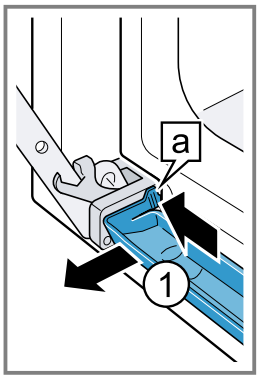

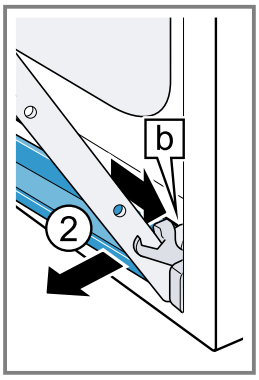

3. Tilt the condensate tray forwards slightly until the lower retaining hooks are released.
4. Use both hands to pull the condensate tray [a] upwards and out at an angle ①.

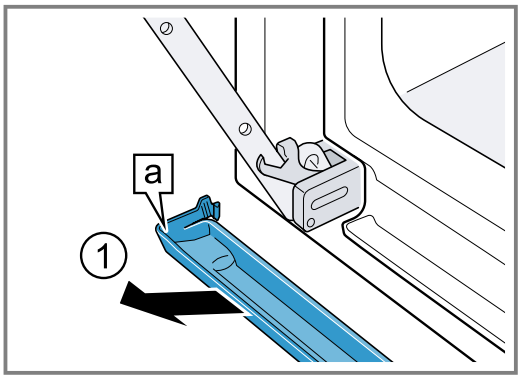

Installing the condensate tray

1. Use both hands to insert the condensate tray [a] at an angle ①.

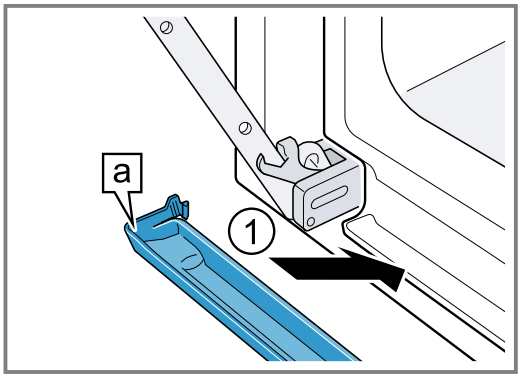

2. Snap the hooks [a] on the left and right of the condensate tray into the gap ①.

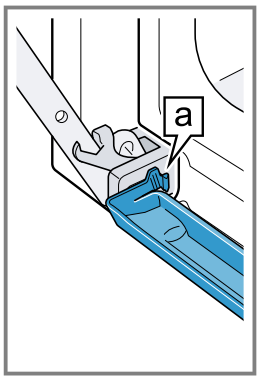

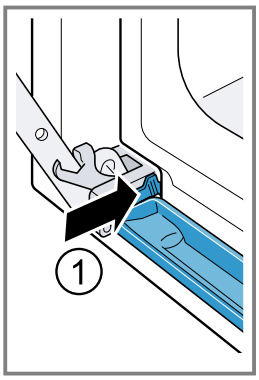

3. Push the condensate tray until the hooks on the right, left and bottom click into place.

✔ The condensate tray is installed horizontally.

22.2 Attaching the appliance door

⚠ **WARNING – Risk of injury!**

The hinges on the appliance door move when the door is opened and closed, which could trap your fingers.

▸ Keep your hands away from the hinges.

When the hinges are not secured, they can snap shut with great force.

▸ Make sure that the locking levers are always either fully closed or (when detaching the oven door) fully open.

1. Slide the appliance door straight onto the two hinges ①. Slide the appliance door on as far as it will go.
2. Open the appliance door fully.
3. Close the locking levers on the left- and right-hand hinges ②.

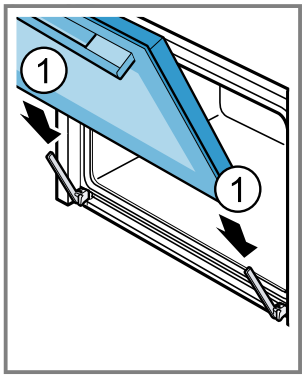

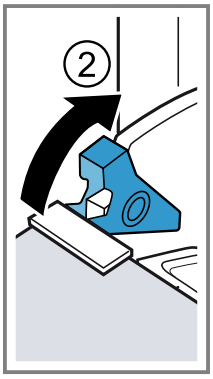

✔ The locking levers are closed. The appliance door is secured and cannot be detached.

4. Close the appliance door.

22.3 Removing the door panes

⚠ **WARNING – Risk of injury!**

The hinges on the appliance door move when the door is opened and closed, which could trap your fingers.

▸ Keep your hands away from the hinges.

Components inside the appliance door may have sharp edges.

▸ Wear protective gloves.

1. Open the appliance door fully.

2. Open the locking levers on the left- and right-hand hinges ①.
✔ The locking levers are open. The hinges are now secured and cannot snap shut.
3. Close the appliance door fully ②.

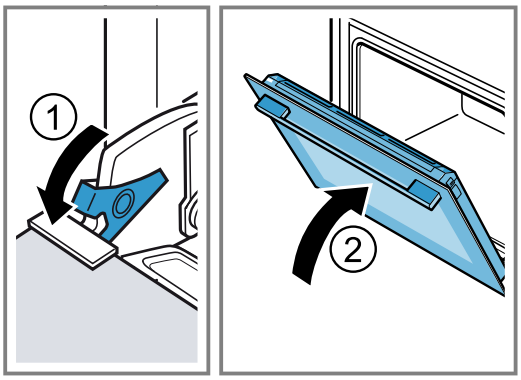

4. Push on the left- and right-hand side of the door cover from the outside ① until it is released.
5. Remove the door cover ②.

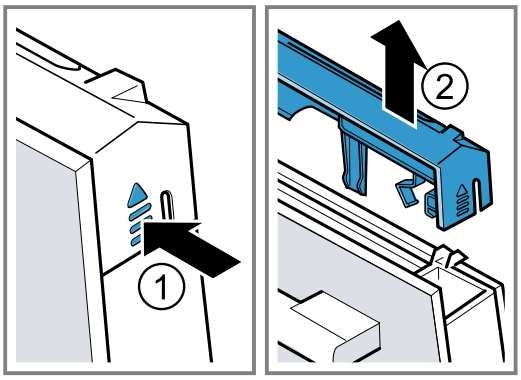

6. Lift out the inner pane ① and set it down carefully on a flat surface.
7. Lift out the intermediate pane ② and set it down carefully on a flat surface.

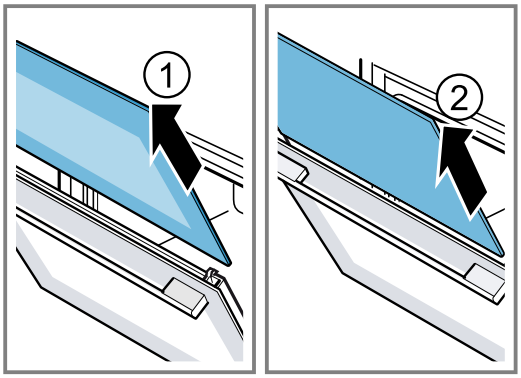

8. Open the appliance door and remove the door seal.

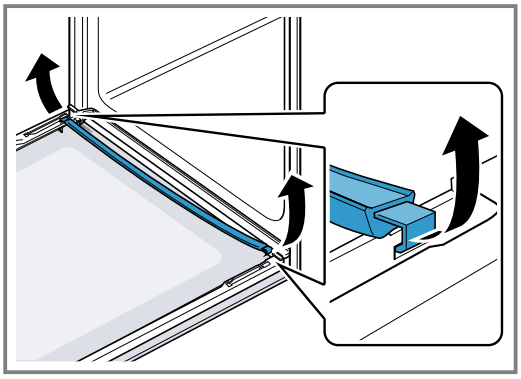

9. If necessary, you can remove the condensate trough for cleaning.
   – Open the appliance door.
   – Tilt the condensate trough upwards and remove it.

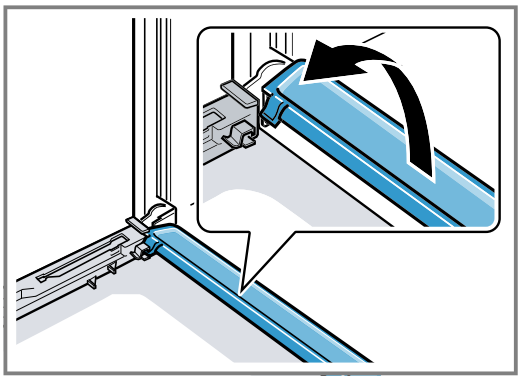

10. ⚠ **WARNING – Risk of injury!**
Scratched glass in the appliance door may develop into a crack.
   ▸ Do not use any harsh or abrasive cleaners or sharp metal scrapers to clean the glass on the oven door, as they may scratch the surface.

   Clean the removed door panes on both sides with glass cleaner and a soft cloth.
11. Clean the condensate trough with a cloth and hot soapy water.
12. Clean the appliance door.
→ *"Suitable cleaning agents", Page 23*
13. Dry the door panes and refit them.

22.4 Fitting the door panes

⚠ **WARNING – Risk of injury!**
The hinges on the appliance door move when the door is opened and closed, which could trap your fingers.
▸ Keep your hands away from the hinges.
Components inside the appliance door may have sharp edges.
▸ Wear protective gloves.

1. Open the appliance door fully.
2. Place the condensate trough vertically into the retainer [a] and turn it downwards.

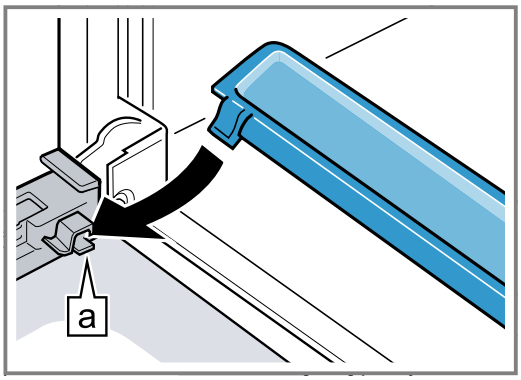

3. Slide the intermediate pane into the left- and right-hand retainers [a].

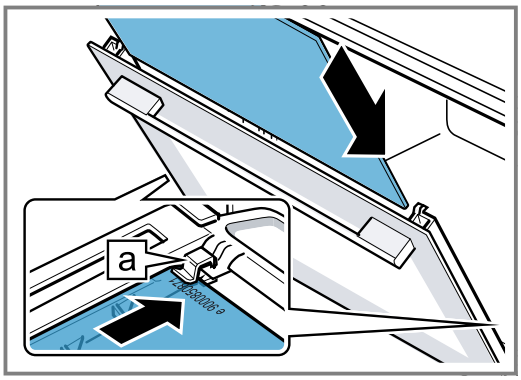

4. Push the intermediate pane upwards until it is in the left- and right-hand retainers [a].

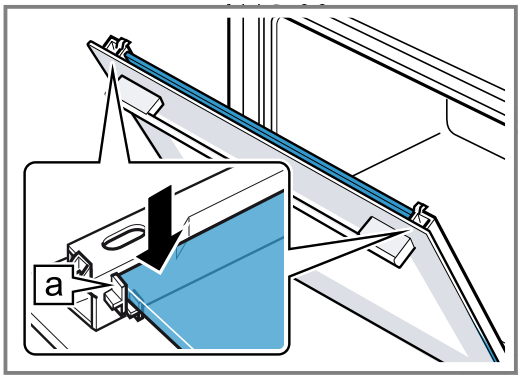

5. Open the appliance door and attach the door seal.

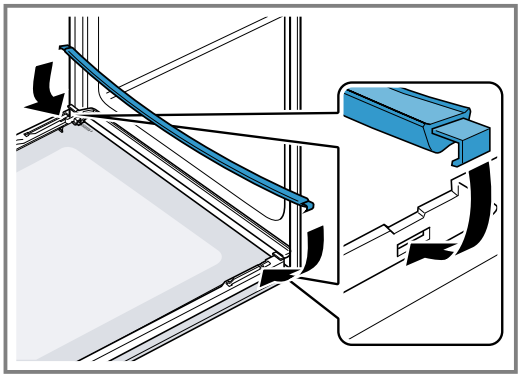

6. Slide the inner pane into the left- and right-hand retainers [a].

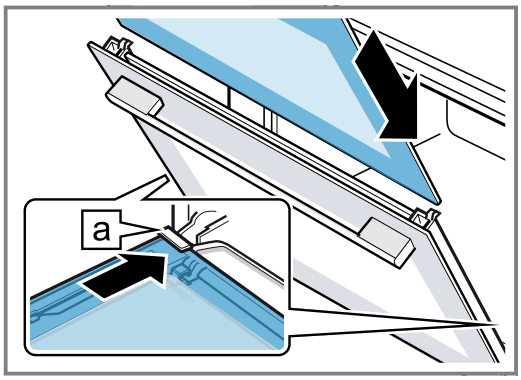

7. Push the inner pane upwards until it is in the left- and right-hand retainers [a].

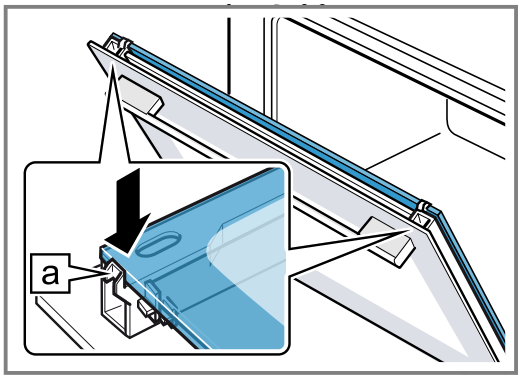

8. Put the door cover in position ① and push down on it until you hear it click into place.

9. Open the appliance door fully.

10. Close the locking levers on the left- and right-hand hinges ②.

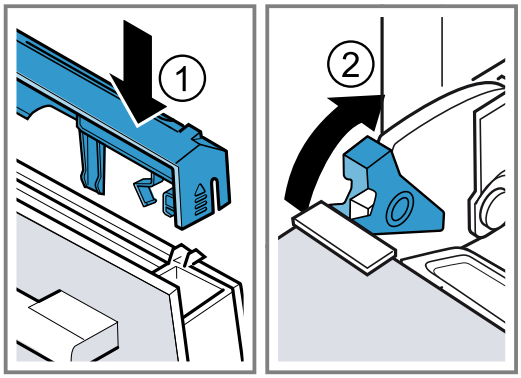

✔ The locking levers are closed. The appliance door is secured and cannot be detached.

11. Close the appliance door.

Note: Do not use the cooking compartment again until the door panes have been correctly fitted.

23 Rails

To thoroughly clean the rails and the cooking compartment, or to replace the rails, you can remove the rails.

23.1 Detaching the rails

⚠ **WARNING – Risk of burns!**
The shelf supports get very hot
- ▸ Never touch the shelf supports when hot.
- ▸ Always allow the appliance to cool down.
- ▸ Keep children at a safe distance.

1. Lift the rail forwards slightly ① and detach it ②.
2. Pull the whole rail to the front ③ and remove it.

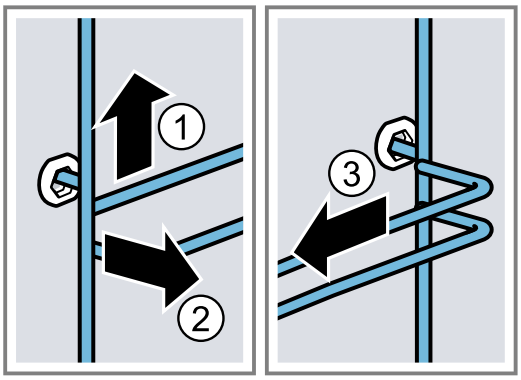

3. Clean the rail.
→ *"Cleaning products", Page 22*

23.2 Attaching the rails

Notes
- The rails only fit on the right or left.
- For both rails, ensure that the curved rods are at the front.

1. First, push the rail into the middle of the rear socket ① until the rail rests against the cooking compartment wall, and then push this back ②.
2. Push the rail into the front socket ③ until the rail also rests against the cooking compartment wall, and then press this downwards ④.

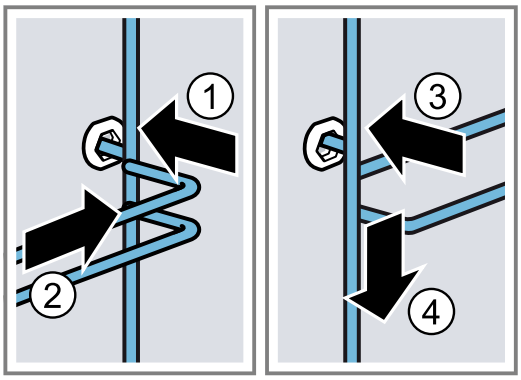

24 Troubleshooting

You can rectify minor faults on your appliance yourself. Read the troubleshooting information before contacting after-sales service. This will avoid unnecessary costs.

⚠ **WARNING – Risk of injury!**
Improper repairs are dangerous.
- ▸ Repairs to the appliance should only be carried out by trained specialist staff.
- ▸ If the appliance is defective, call Customer Service.

⚠ **WARNING – Risk of electric shock!**
Incorrect repairs are dangerous.
- ▸ Repairs to the appliance should only be carried out by trained specialist staff.
- ▸ Only use genuine spare parts when repairing the appliance.
- ▸ If the power cord of this appliance is damaged, it must be replaced by trained specialist staff.

24.1 Malfunctions

Fault	Cause and troubleshooting
The appliance is not working.	The circuit breaker is faulty. ▸ Check the circuit breaker in the fuse box.
	There has been a power cut. ▸ Check whether the lighting in your kitchen or other appliances are working.
"Sprache Deutsch" appears in the display.	There has been a power cut. ▸ Implement the settings for the initial configuration. → *"Carrying out the initial configuration", Page 11*
The operation does not start or is interrupted.	Malfunction ▸ Call the after-sales service. → *"Customer Service", Page 34*
	Different causes are possible. ▸ Check any notifications that appear in the display. → *"Displaying information", Page 13*

Fault	Cause and troubleshooting
Appliance does not heat up and "Demo mode is switched on" appears in the display.	Device is in demo mode. **1.** Briefly disconnect the appliance from the power supply by switching the circuit breaker in the fuse box off and back on again. **2.** Switch off demo mode within three minutes in the → *"Basic settings", Page 22*.
	There has been a power cut. ▸ Open and close the appliance door once after a power failure. ✔ The appliance is checked and is ready to use.
The appliance does not start and "Cooking compartment too hot" appears in the display.	The cooking compartment is too hot for the selected dish or type of heating. ▸ Allow the cooking compartment to cool down and start again.
The time is not displayed when the appliance is switched off.	Basic setting has been changed. ▸ Change the basic setting for the time display. → *"Basic settings", Page 22*
HomeConnect is not working correctly.	Different causes are possible. ▸ Go to www.home-connect.com.
The control panel cannot be opened.	The circuit breaker is faulty. ▸ Check the circuit breaker in the fuse box.
	There has been a power cut. ▸ Check whether the lighting in your kitchen or other appliances are working.
	Malfunction **1.** Call the after-sales service. → *"Customer Service", Page 34* **2.** If there is water in the water tank, empty the water tank: – Open the appliance door. – Grip on the right and left below the control panel. – Slowly pull out the control panel and push it upwards.
Intense steam generation when steaming.	The appliance is automatically calibrated. No action required.
	If the cooking times are too short, the appliance is not automatically calibrated. If a lot of steam is generated repeatedly, the appliance is recalibrated. **1.** Reset the appliance to the factory setting. → *"Basic settings", Page 22* **2.** Repeat the calibrations. → *"Before using for the first time", Page 11*
Steam escaping from ventilation slots during cooking	Escaping steam is not a fault. No action required.
The appliance requests descaling without the counter appearing in advance.	The set water hardness range is too low. **1.** Descale the appliance. → *"Descaling", Page 26* **2.** Check the water hardness and set this in the basic settings. → *"Basic settings", Page 22*
The appliance prompts you to rinse it.	During the descaling, the power supply is interrupted or the appliance is switched off. ▸ Rinse the appliance twice. → *"Descaling", Page 26*
"Fill water tank" appears in the display even though the water tank has been filled.	The water tank has not clicked into place. ▸ Insert the water tank correctly so that it engages in the holder. → *"Filling the water tank", Page 15*
	The water tank has fallen out. Shaking has caused parts to come loose in the water tank. The water tank is leaking. ▸ Order a new water tank.

Fault	Cause and troubleshooting
"Fill water tank" appears in the display even though the water tank has been filled.	Malfunction ▸ Do not use deionised or filtered water. → *"Before using for the first time", Page 11*
	The sensor is defective. ▸ Call the after-sales service. → *"Customer Service", Page 34*
Buttons are flashing.	Condensation has formed behind the control panel. No action required. As soon as the condensation has evaporated, the buttons no longer flash.
"Plopping" sounds can be heard when cooking with steam.	Water vapour requires the cold/heat effect for frozen food. No action required.
The appliance hums during operation and after it is switched off.	Functional test of the pump creates operating noise. No action required.
The appliance hums or clicks when the control panel is opened.	Removing the control panel creates operating noise. No action required.
The interior lighting does not work.	The LED light is defective. **Note:** Do not remove the glass cover. ▸ Call the after-sales service. → *"Customer Service", Page 34*
Maximum operating time reached.	To prevent an unwanted permanent operation, the appliance automatically stops heating after several hours if the settings are unchanged. A message appears in the display. The point at which the maximum operating time is reached is determined by the corresponding settings for an operating mode. **1.** To continue operation, switch off the appliance with on/off first. **2.** Then use on/off to switch on the appliance and set the required operation. **Tip:** To prevent the appliance from switching off when you do not want it to, set a cooking time.
A message with "D" or "E" appears in the display, e.g. D0111 or E0111.	The electronics have detected a fault. **1.** Switch the appliance off and on again. ✔ If the fault was a one-off, the message disappears. **2.** If the message appears again, call the after-sales service. Please specify the exact error message when calling. → *"Customer Service", Page 34*
The cooking result is not satisfactory.	Settings were unsuitable. Setting values, e.g. temperature or cooking time, depend on the recipe, quantity and food. ▸ Next time, set lower or higher values. **Tip:** A lot of information about the food preparation and corresponding setting values can be found on our website www.siemens-home.bsh-group.com .

25 Disposal

Find out here how to dispose of old appliances correctly.

25.1 Disposing of old appliance

Valuable raw materials can be reused by recycling.

1. Unplug the appliance from the mains.
2. Cut through the power cord.
3. Dispose of the appliance in an environmentally friendly manner.
   Information about current disposal methods are available from your specialist dealer or local authority.

This appliance is labelled in accordance with European Directive 2012/19/EU concerning used electrical and electronic appliances (waste electrical and electronic equipment - WEEE).
The guideline determines the framework for the return and recycling of used appliances as applicable throughout the EU.

26 Customer Service

If you have any queries on use, are unable to rectify faults on the appliance yourself or if your appliance needs to be repaired, contact Customer Service. Function-relevant genuine spare parts according to the corresponding Ecodesign Order can be obtained from Customer Service for a period of at least 10 years from the date on which your appliance was placed on the market within the European Economic Area.

Note: Under the terms of the manufacturer's warranty the use of Customer Service is free of charge.

Detailed information on the warranty period and terms of warranty in your country is available from our after-sales service, your retailer or on our website.
If you contact Customer Service, you will require the product number (E-Nr.) and the production number (FD) of your appliance.
The contact details for Customer Service can be found in the enclosed Customer Service directory or on our website.

This product contains light sources from energy efficiency class G. These light sources are available as a spare part and should only be replaced by trained specialist staff.

26.1 Product number (E-Nr.) and production number (FD)

You can find the product number (E-Nr.) and the production number (FD) on the appliance's rating plate. You will see the rating plate with these numbers if you open the appliance door. On some appliances with steam-assisted cooking, you will find the rating plate behind the control panel.

Make a note of your appliance's details and the Customer Service telephone number to find them again quickly.

27 Declaration of Conformity

BSH Hausgeräte GmbH hereby declares that the appliance with Home Connect functionality conforms to the basic requirements and other relevant provisions of Directive 2014/53/EU.
A detailed RED Declaration of Conformity can be found online at www.siemens-home.bsh-group.com among the additional documents on the product page for your appliance.

CE

Hereby, BSH Hausgeräte GmbH declares that the appliance with Home Connect functionality is in compliance with relevant statutory requirements.[1]

A detailed Declaration of Conformity can be found online at www.siemens-home.bsh-group.com/uk/ among the additional documents on the product page for your appliance.[1]

UK CA

Only applies to Great Britain

2.4 GHz band (2400–2483.5 MHz): Max. 100 mW
5 GHz band (5150–5350 MHz + 5470–5725 MHz): Max. 100 mW

!	BE	BG	CZ	DK	DE	EE	IE	EL	ES
	FR	HR	IT	CY	LI	LV	LT	LU	HU
	MT	NL	AT	PL	PT	RO	SI	SK	FI
	SE	NO	CH	TR	IS	UK (NI)			
5 GHz WLAN (Wi-Fi): For indoor use only.									

AL	BA	MD	ME	MK	RS	UK	UA
5 GHz WLAN (Wi-Fi): For indoor use only.							

[1] Only applies to Great Britain

28 How it works

Here, you can find the ideal settings for various types of food as well as the best accessories and cookware. We have perfectly tailored these recommendations to your appliance.

28.1 General cooking tips

Please take note of the following information when cooking all types of food.

- The temperature and cooking time depend on the amount of food and the recipe. Settings ranges are specified for this reason. Try using the lower values to start with.
- The setting values apply to food placed in the cooking compartment while the cooking compartment is still cold. Do not place accessories into the cooking compartment until it has finished preheating.
- Remove any accessories that are not being used from the cooking compartment.

28.2 Baking tips

- Dark-coloured metal baking tins are most suitable for baking cakes, bread and other baked goods.
- Use wide, shallow cookware for bakes and gratins. Food takes longer to cook in deep, narrow cookware and it browns more on top.
- Silicone moulds are not suitable.
- If you are cooking bakes directly in the universal pan, place the universal pan into the cooking compartment at level 1.
- The setting values for bread dough apply to both dough placed on a baking tray and dough placed in a loaf tin.

ATTENTION!

When the cooking compartment is hot, any water inside it will create steam. The change in temperature may cause damage.

- ▸ Never pour water into the cooking compartment when it is still hot.
- ▸ Never place cookware containing water on the cooking compartment floor.

Shelf positions

If you bake on one level, use shelf position 1.

Baking on 2 levels	Shelf position
Universal pan Baking tray	3 1
Baking tins on two wire racks	3 1

Use the 4D hot air heating function.

Notes

- Items that are placed in the appliance on baking trays or in baking tins/dishes at the same time will not necessarily be ready at the same time.
- If you opt for steam-assisted cooking, you can only cook on one level.

28.3 Roasting, braising and grilling tips

- The recommended settings are for fridge-temperature food and unstuffed, oven-ready poultry.
- Place the poultry onto the cookware breast-side or skin-side down.
- Turn roasting joints, grilled items or whole fish after approx. ½ to ⅔ of the specified time.

Calculating the cooking time, e.g. 20+35:

- To calculate the cooking time, assume 20 minutes per 500 g of meat. Then add an extra 35 minutes to that figure.
- For 1.5 kg, the cooking time would therefore be 95 minutes.

Cooking time range, e.g. 10-15:

- Your food will be ready within the specified range of time (in minutes).

Roasting on the wire rack

Food roasted on the wire rack will become very crispy on all sides. You can roast large poultry, for example, or multiple individual pieces at the same time.

- Roast pieces of a similar weight and thickness. The grilled food will brown evenly and will remain succulent and juicy.
- Place the food to be roasted directly on the wire rack.
- To catch any liquids that drip down, place the universal pan, with the wire rack inside it, into the cooking compartment at the specified shelf height.
- Add up to ½ litre of water to the universal pan, depending on the size and type of food that you want to roast.
  You can make a sauce from the juices that are collected. This also means that less smoke is produced and the cooking compartment does not become as dirty.

Roasting in cookware

If you cover the cookware when you cook your food, this will keep the cooking compartment cleaner.

General information about roasting in cookware

- Use heat-resistant, ovenproof cookware.
- Place the cookware on the wire rack.
- Glass cookware is best.
- Follow the manufacturer's instructions for your roasting dishes.

Roasting in uncovered cookware

- Use a deep roasting dish.
- If you do not have any suitable cookware, you can use the universal pan.

Roasting in covered cookware

- Use a suitable lid that seals well.
- When roasting meat, there should be at least 3 cm between the food and the lid. The meat may expand.

⚠ **WARNING – Risk of scalding!**
Very hot steam may escape when the lid is opened after cooking. Steam may not be visible, depending on the temperature.
- Lift the lid in such a way that the hot steam can escape away from you.
- Keep children away from the appliance.

Grilling

Grill food if you want it to be crispy.
The "Grill" heating function is good for cooking thinner pieces of poultry, meat and fish such as steaks, drumsticks and burgers. It is also excellent for toasting bread.
Circulated air grilling is very well suited to cooking whole poultry and fish, as well as meat, e.g. roast pork with crackling.
- When grilling several food items, choose pieces that are of a similar weight and thickness. The grilled food will brown evenly and will remain succulent and juicy.
- Place the food to be grilled directly onto the wire rack.
- To catch any liquids that drip down, place the universal pan into the cooking compartment at least one level below the wire rack.

Notes
- The grill element switches on and off continuously. This is normal. The grill setting that you use determines how frequently this occurs.
- Smoke may be produced when grilling.

28.4 Cooking instructions for ready meals

- The cooking result greatly depends on the quality of the food. Pre-browning and irregularities are sometimes already present on the raw product.
- Do not use frozen products that are covered with a thick layer of ice. Remove any ice on the food.
- Distribute foods that are in the form of separate pieces, such as bread rolls and potato products, so that they are spread out flat and evenly on the accessory. Leave a little space between the individual pieces.
- Follow the manufacturer's instructions on the packaging.

28.5 Steaming

Cook dishes gently. The food remains particularly succulent.
In contrast to steam-assisted cooking, the meat does not become crispy on the outside.
- Use open, heat-resistant cookware that is suitable for cooking with steam.
- The perforated steam container (size XL) is the best option here. To catch any liquid that drips down, slide in the universal pan one level below in the cooking compartment.
  You can also use a glass tray and place this onto the wire rack.
- Cover food that can normally be cooked in a water bath, with film, e.g. with cling film.
- You do not need to turn the food.
- For a different flavour, you can sear the meat, poultry or fish before steaming. Reduce the cooking time.
- Larger pieces require a longer heating-up time and a longer cooking time.
- If you are using several pieces which are the same weight, the appliance's heating-up time is increased. The cooking time remains the same.
- In the main part of the instruction manual, you can find information on how to set the steam function.
  → *"Steam", Page 15*

Vegetables on several levels
You can easily cook more than one type of food or even whole menus, e.g. broccoli and potatoes, on two levels.

Rice or cereals
- Add water or liquid in the indicated ratio.
  For example, this means 1:1.5 for 100 g of rice, 150 ml liquid.

28.6 List of foods

Recommended settings for a variety of foods, sorted into food categories.

Recommended settings for various types of food

Food	Accessories/cookware	Shelf position	Heating function → *Page 8*	Temperature in °C	Steam intensity	Cooking time in mins
Victoria sponge cake	x 2 Baking tin, dia. 20 cm	1		160–170 [1]	-	20–30

[1] Preheat the appliance.
[2] Add the food after approx. one hour.
[3] Preheat the appliance for 5 minutes.
[4] Preheat the appliance for three minutes.
[5] Turn the dish several times.

Food	Accessories/cook-ware	Shelf pos-ition	Heating function → *Page 8*	Temperature in °C	Steam in-tensity	Cooking time in mins
Victoria sponge cake	x 2 Baking tin, dia. 20 cm	1		150–160	Low	25–35
Rich fruit cake	High Ø 23 cm tin	1		140–160	-	120–180
Fruit pie	Plate Ø 20 cm or Pie tin	1		180–190	-	45–50
Fruit pie	Plate Ø 20 cm or Pie tin	1		170–190	-	60–75
Quiche	Dark coated quiche tin	1		190–210	-	35–45
Bread or white bread	Loaf tin, 1 x 900 g or 2 x 450 g	1		190–210 [1]	-	20–30
Bread or white bread	Loaf tin, 1 x 900 g or 2 x 450 g	1		**1.** 210–220 **2.** 180–190	High Off	**1.** 10–15 **2.** 25–35
Bread or white bread	Loaf tin, 1 x 900 g or 2 x 450 g	1		190–200	-	45–55
Scones	Baking tray	1		180–200 [1]	-	10–14
Biscuits	Baking tray	2		140–160 [1]	-	10–25
Small cakes	12-cup-tin	1		140–160 [1]	-	20–35
Pavlova	Baking tray	2		90–100 [1]	-	120–180
Yorkshire pudding	12-cup-tin	1		200–220 [1]	-	15–25
Pizza, home-made	Baking tray	1		200–220	-	20–30
Pizza, home-made	Baking tray	1		220–230	-	25–30
Pizza, home-made, thin crust	Pizza tray	1		210–230	-	20–30
Victoria sponge cake, 2 levels	4 pcs Baking tin, dia. 20 cm	3+1		160–170 [1]	-	20–35
Biscuits, 2 levels	2 pcs Baking tray	3+1		140–160 [1]	-	15–30
Top side, top rump	Wire rack	1		160 - 170	-	30 + 25
Top side, top rump	Wire rack	1		170 - 180	Low	100 - 120
Leg, bone-in	Wire rack	1		160 - 170	-	25 + 25
Leg, bone-in, 1.5 kg	Wire rack	1		180 - 190	Low	80 - 90
Belly	Wire rack	1		170 - 180	-	30 + 25
Chicken, whole	Wire rack	1		170 - 180	-	25 + 15
Chicken, whole, 1.5 kg	Wire rack	1		180 - 190	Medium	65 - 75
Turkey, crown	Wire rack	1		150 - 160	-	20 + 15
Turkey, crown, 3 kg	Uncovered cook-ware	1		140 - 150	Medium	100 - 140
Turkey, whole, 4-8 kg	Wire rack	1		150 - 160	-	12 + 12 [2]
Turkey, whole, 7 kg	Universal pan	1		**1.** 140 - 150 **2.** 170 - 180	Medium Off	**1.** 120 - 150 **2.** 30 - 40
Complete meal with chicken	Wire rack + Wire rack	3+1		180	-	Calculation for chicken (see table above)

[1] Preheat the appliance.
[2] Add the food after approx. one hour.
[3] Preheat the appliance for 5 minutes.
[4] Preheat the appliance for three minutes.
[5] Turn the dish several times.

Food	Accessories/cookware	Shelf position	Heating function → *Page 8*	Temperature in °C	Steam intensity	Cooking time in mins
Complete meal with chicken	Wire rack + Wire rack	3+1		180	Low Steam 0 when yorkshire pudding is placed in the oven	65 - 75
Bacon rashers	Wire rack	2		[3]	-	**1.** First side 4-5 **2.** Second side 3-4
Sausages, 2-4 cm thick	Wire rack	2		[4]	-	10 - 15 [5]
Belly	Wire rack	1		200 - 220	-	30 + 25
Belly, 1 kg	Wire rack	1		**1.** 170 - 180 **2.** 190 - 200	Low Off	**1.** 50 - 60 **2.** 25 - 35
Gammon joint	Wire rack	2		180 - 200	-	30 + 25
Chicken, whole	Wire rack	1		200 - 220	-	25 + 15
Chicken, whole, 1.5 kg	Wire rack	1		180 - 190	Medium	65 - 75
Chicken breast, 150 g each	Steaming tray	2		100	-	15–25
Fish, whole 300 g, e.g. trout	Perforated steaming tray	2		80–90	-	15–25
Fish fillet, 200 g	Perforated steaming tray	2		80–100	-	10–16
Unpeeled boiled potatoes	Perforated steaming tray	2		100	-	35–45
Cauliflower, whole	Perforated steaming tray	2		100	-	25–35
Carrots, slices	Perforated steaming tray	2		100	-	10–20
Spinach	Perforated steaming tray	2		100	-	2–3
Long-grain rice, 1:1.5	Shallow cookware	1		100	-	20–30
Hard-boiled eggs	Perforated steaming tray	2		100	-	9–11
Crème Brulée	Individual moulds	1		85	-	20–30
Crème caramel	Individual moulds	1		85	-	25–35
1. Boiled potatoes **2.** Frozen salmon fillet **3.** Broccoli florets	**1.** Perforated steaming tray, size S, on the wire rack **2.** Unperforated steaming tray, size S, on the wire rack **3.** Perforated steaming tray, size XL	**1.** 3 **2.** 3 **3.** 2		100	-	**1.** 25 **2.** 20 **3.** 9
Yoghurt	Individual moulds	Cooking compartment floor		35 - 40	-	300 - 360

[1] Preheat the appliance.
[2] Add the food after approx. one hour.
[3] Preheat the appliance for 5 minutes.
[4] Preheat the appliance for three minutes.
[5] Turn the dish several times.

28.7 Special cooking methods and other applications

Information and recommended settings for special cooking methods and other applications, e.g. slow cooking or preserving.

Slow cooking

Cook prime cuts of meat slowly at a low temperature, e.g. tender cuts of beef, veal, lamb or poultry.

Slow cooking poultry or meat

Note: When using the slow cooking type of heating, you cannot delay the start of the programme by setting an end time.

Requirement: The cooking compartment is cold.

1. Use fresh, clean, hygienic meat without bones.
2. Place the cookware onto the wire rack at level 1 in the cooking compartment.
3. Preheat the cooking compartment and cookware for approx. 15 minutes.
4. Sear the meat on all sides on the hob at a very high heat.
5. Immediately place the meat into the pre-warmed cookware in the cooking compartment.
   To ensure that the climate in the cooking compartment remains constant, keep the cooking compartment door closed during slow cooking.
6. After slow cooking, remove the meat from the cooking compartment.

Tips for slow cooking

Here you will find tips for achieving good results when slow cooking food.

Issue	Tip
You want to slow cook a duck breast.	▪ Place the cold duck breast into a pan. ▪ Sear the skin side first. ▪ Slow cook the duck breast. ▪ After slow cooking, grill the duck breast for 3 to 5 minutes until crispy.
You want to serve your slow-cooked meat as hot as possible.	▪ Preheat the serving plate. ▪ Make sure that the sauces that accompany the duck breast are very hot when you serve them.

Recommended settings for slow cooking

Food	Accessory/cookware	Shelf position	Searing time in mins	Heating function → *Page 8*	Temperature in °C	Cooking time in mins
Duck breast, medium rare, 300 g each	Uncovered cookware	1	6 - 8		95 [1]	45 - 60
Fillet of pork, whole	Uncovered cookware	1	4 - 6		85 [1]	45 - 70
Fillet of beef, 1 kg	Uncovered cookware	1	4 - 6		85 [1]	90 - 120
Veal medallions, 4 cm thick	Uncovered cookware	1	4		80 [1]	40 - 60
Saddle of lamb, boneless, 200 g each	Uncovered cookware	1	4		85 [1]	30 - 45

[1] Preheat the appliance.

Proving dough

Always allow dough to prove in two steps: Once in their entirety (1. - dough fermentation) and a second time when shaped (2. – final fermentation).

Requirement: The cooking compartment is cold.

1. Dough fermentation:
   – Slide the wire rack into the cooking compartment.
   – Place the dough in a bowl onto the wire rack.
   – Use the recommended settings when configuring the appliance settings.
   – Do not open the appliance door while the dough is proving, otherwise moisture will escape.
2. Final fermentation:
   – Continue processing the dough and turn it into the final shape for baking.
   – Place the dough in the specified shelf position.
3. Wipe the cooking compartment dry before baking.

Recommended settings for proving dough

Food	Accessory/cookware	Shelf position	Heating function → *Page 8*	Temperature in °C/ Dough proving heating function	Cooking time in mins
Rich dough, e.g. panettone	Bowl on wire rack Tin/dish on the wire rack	**1.** 1 **2.** 1	**1.** **2.**	**1.** 40–45 **2.** 40–45	**1.** 40–90 **2.** 30–60

Food	Accessory/cookware	Shelf position	Heating function → *Page 8*	Temperature in °C/ Dough proving heating function	Cooking time in mins
Rich dough, e.g. panettone	Bowl on wire rack Tin/dish on the wire rack	**1.** 1 **2.** 1	**1.** ⊡ **2.** ⊡	**1.** 2 **2.** 2	**1.** 40–90 **2.** 30–60
White bread	Bowl on wire rack Universal pan	**1.** 1 **2.** 1	**1.** ⊡ **2.** ⊡	**1.** 35–40 **2.** 35–40	**1.** 30–40 **2.** 15–25
White bread	Bowl on wire rack Universal pan	**1.** 1 **2.** 1	**1.** ⊡ **2.** ⊡	**1.** 1 **2.** 1	**1.** 30–40 **2.** 15–25

Defrosting

You can defrost frozen food in your appliance.

Tips for defrosting food

- The Steam function is suitable for defrosting frozen fruit and vegetables.
- Use the 4D hot air heating function to defrost baked goods.
- It is better to defrost poultry, meat and fish in the refrigerator.
- Remove frozen food from its packaging before you defrost it.
- Accessory/cookware:
  - Place frozen fruit and vegetables into the perforated steaming tray (size XL). To catch any liquids that drip down, place the universal pan into the cooking compartment below the steaming tray.
  - Frozen food for which the liquid is an integral component and needs to be retained (e.g. frozen creamed spinach) should be placed into the universal pan or into a piece of cookware that is then placed onto the wire rack.
  - Place baked goods directly onto the wire rack.
- The recommended settings are for freezer-temperature food (-18 °C).

Reheating

You can use steam-assisted reheating to gently warm up food. The food tastes and looks as though it has been freshly cooked. You can even warm and crisp up baked goods from the day before.

Tips for reheating food

- Use uncovered, heat-resistant cookware that is suitable for cooking with steam.
- Use wide, shallow cookware. Reheating takes longer if you use cold cookware.
- Place the cookware on the wire rack.
- Place food that you are not reheating in cookware (e.g. bread rolls) directly onto the wire rack at level 1.
- Do not cover the food.
- Do not open the cooking compartment door while the food is being reheated, otherwise large amounts of steam will escape.
- Wipe the cooking compartment dry after using it to reheat food.

Recommended settings for reheating

Food	Accessories/cookware	Shelf position	Heating function → *Page 8*	Temperature in °C	Steam intensity	Cooking time in mins
Pizza, cooked	Wire rack	1	⊡	170 - 180 [1]	-	5 - 15
Bread rolls, baguette, baked	Wire rack	1	⊡	160 - 170 [1]	-	10 - 20

[1] Preheat the appliance.

28.8 Test dishes

The information in this section is provided for test institutes to facilitate testing of the appliance in accordance with EN 60350-1.

Baking

- The setting values apply to food that is placed into a cold cooking compartment.
- Please take note of the information on preheating in the recommended settings tables. These setting values assume that the rapid heat-up function is not being used.
- For baking, use the lower of the specified temperatures to start with.
- Items that are placed in the appliance on baking trays or in baking tins/dishes at the same time will not necessarily be ready at the same time.
- Shelf positions when baking on 2 levels:
  - Universal pan: Shelf position 3
    Baking tray: Shelf position 1
- Hot water sponge cake
  - When baking on two levels, place the springform tins at diagonally opposite corners of the wire racks.

Recommended settings for baking

Food	Accessories/cookware	Shelf position	Heating function → *Page 8*	Temperature in °C	Steam intensity	Cooking time in mins
Viennese whirls	Baking tray	1		150 - 160 [1]	-	25 - 40
Viennese whirls	Baking tray	1		140 - 150 [1]	-	25 - 40
Viennese whirls, on 2 levels	Universal pan + Baking tray	3+1		140 - 150 [1]	-	30 - 40
Small cakes	Baking tray	1		160 [1]	-	25 - 35
Small cakes	Baking tray	1		150 [1]	-	25 - 35
Small cakes, on 2 levels	Universal pan + Baking tray	3+1		150 [1]	-	25 - 35
Hot water sponge cake	Springform cake tin, diameter 26 cm	1		160 - 170 [2]	-	25 - 35
Hot water sponge cake	Springform cake tin, diameter 26 cm	1		160 - 170 [2]	-	25 - 35
Hot water sponge cake	Springform cake tin, diameter 26 cm	1		**1.** 150 - 160 **2.** 150 - 160	Low Off	**1.** 10 **2.** 20 - 30

[1] Preheat the appliance for five minutes. Do not use the rapid heating function.
[2] Preheat the appliance. Do not use the rapid heating function.

Steaming

Slide the universal pan into the cooking compartment one level below the perforated steaming tray (size XL) if instructed to do so in the recommended settings table.

Shelf positions

Shelf positions when steaming on 1 level:

- Use a maximum of 2.5 kg.
- Perforated steaming tray, size XL: Shelf position 2

Shelf positions when steaming on 2 levels:

- Use a maximum of 1.8 kg per level.
- Perforated steaming tray, size XL: Shelf position 3
- Perforated steaming tray, size XL: Shelf position 2

Recommended settings for steaming

Food	Accessory/cookware	Shelf position	Heating function → *Page 8*	Temperature in °C	Cooking time in mins
Peas, frozen, two containers	2 pcs Steam containers, XL size + Universal pan	3+2+1		100	- [1, 2]
Broccoli, fresh, 300 g	Steam containers, XL size	2		100 [3]	6–7 [4]
Broccoli, fresh, one container	Steam containers, XL size	2		100 [3]	6–7 [4]

[1] The test is over when 85 °C is reached at the coldest spot (see IEC 60350-1).
[2] The test is over when 85 °C is reached at the coldest spot (see IEC 60350-1).
[3] Preheat the appliance.
[4] A comparable degree of cooking between the reference sample and the main sample is achieved if the reference sample is cooked for 5 minutes (produced as described in IEC 60350-1).

Recommended settings for grilling

Food	Accessory/cookware	Shelf position	Heating function → *Page 8*	Temperature in °C/grill setting	Cooking time in mins
Toasting bread	Wire rack	3		3	2–6

29 Installation instructions

Observe this information when installing the appliance.

29.1 General installation instructions

Follow these instructions before you start with the installation of the appliance.

- The safe operation of this appliance can only be guaranteed if it has been installed to a professional standard in accordance with these installation instructions. The installer shall be liable for damages incurred as a result of incorrect installation.
- Check the appliance for damage after unpacking it. Do not connect the appliance if it has been damaged in transit.
- Before starting up the appliance, remove any packaging material and adhesive film from the cooking compartment and the door.
- Proceed in accordance with the installation sheets for installing accessories.
- Fitted units must be heat-resistant up to 95 °C, and adjacent unit fronts up to 70 °C.
- Do not install the appliance behind a decorative door or the door of a kitchen unit. There is a risk of overheating.
- Cut-out work on the units should be carried out before installing the appliance. Remove any shavings. Otherwise, the correct operation of electrical components may be adversely affected.
- The mains socket for the appliance must either be located in the hatched area a or outside of the area where the appliance is installed.
  Any unsecured units must be secured to the wall using a standard bracket b.

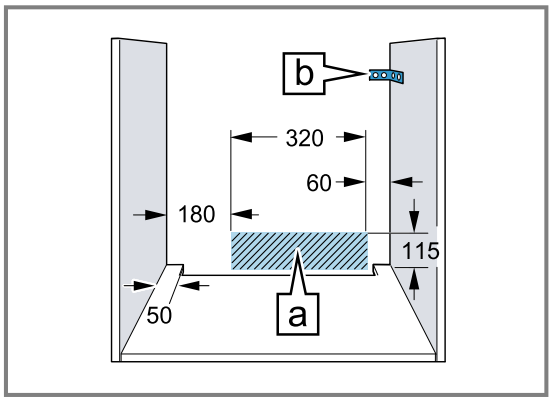

- For appliances that have a hinged switch panel, make sure that the switch panel does not hit adjacent kitchen units when you open it.
- Wear protective gloves so that you do not cut yourself. Parts that are accessible during installation may have sharp edges.
- Dimensions of the figures in mm.

⚠ WARNING – Risk of fire!

It is dangerous to use an extended power cord and non-approved adapters.

- ▸ Do not use multiple socket strips.
- ▸ Only use extension cables that are certified, have a minimum cross section of 1.5 mm² and comply with the applicable national safety requirements.
- ▸ If the power cord is too short, contact customer service.
- ▸ Only use adapters approved by the manufacturer.

ATTENTION!

Carrying the appliance by the door handle could break it. The door handle cannot support the weight of the appliance.

- ▸ Do not carry or hold the appliance by the door handle.

29.2 Appliance dimensions

You will find the dimensions of the appliance here

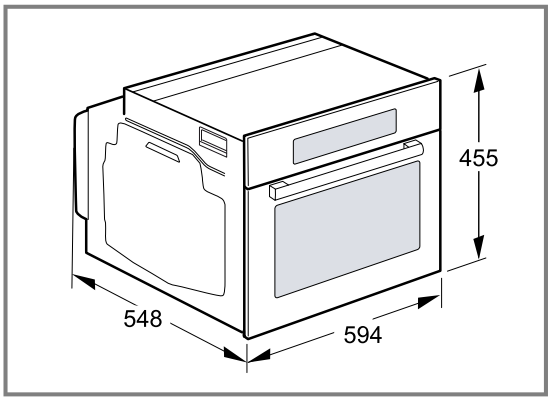

29.3 Installation below a worktop

Observe the installation dimensions and the installation instructions when installing below a worktop.

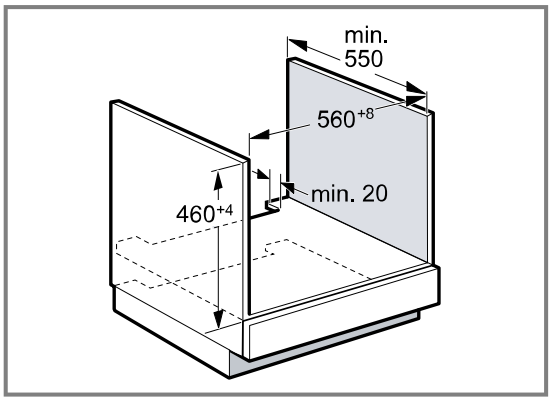

- To ventilate the appliance, the intermediate floor must have a ventilation cut-out.
- The worktop must be secured to the built-in unit.
- Observe any available installation instructions for the hob.

29.4 Installation underneath a hob

If the appliance is installed under a hob, the following minimum dimensions must be adhered to (including substructure, if applicable).

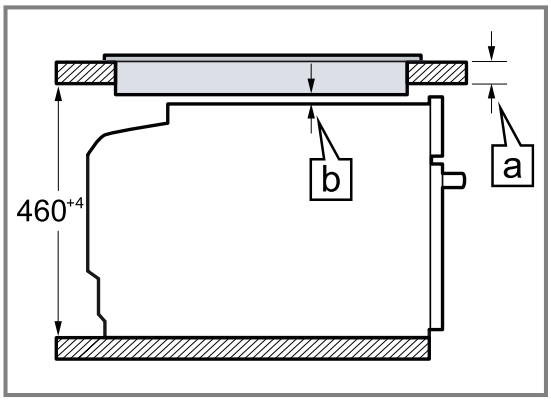

The minimum worktop thickness b a is based on the required minimum clearance a.

Hob type	a raised in mm	a flush in mm	b in mm
Induction hob	42	43	5
Full-surface induction hob	52	53	5
Gas hob	32	43	5
Electric hob	32	35	2

29.5 Installation in a tall unit

Observe the installation dimensions and the installation instructions when installing in a tall unit.

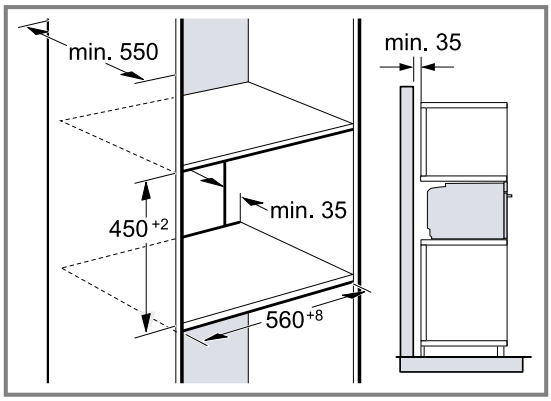

- To ventilate the appliance, the intermediate floors must have a ventilation cut-out.
- If the tall unit has another back panel in addition to the element back panels, this must be removed.
- Only fit the appliance up to a height which allows accessories to be easily removed.

29.6 Installing two appliances on top of each other

Your appliance can also be installed above or below another appliance. Observe the installation dimensions and the installation instructions when installing appliances on top of each other.

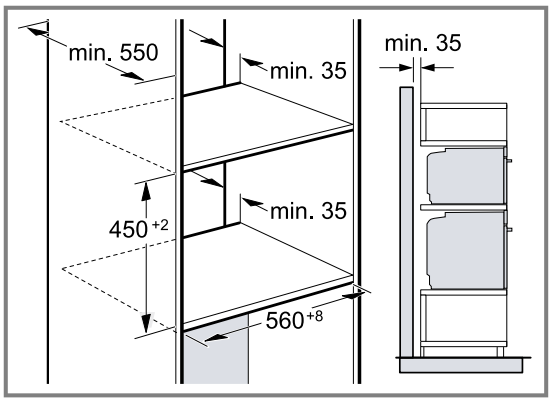

- To ventilate the appliances, the intermediate floor must have a ventilation cut-out.
- To ensure sufficient ventilation of the two appliances, there must be a ventilation opening of at least 200 cm² in the base area. To do this, trim the base panel or fit a ventilation grille.
- Ensure that air exchange is guaranteed in accordance with the diagram.

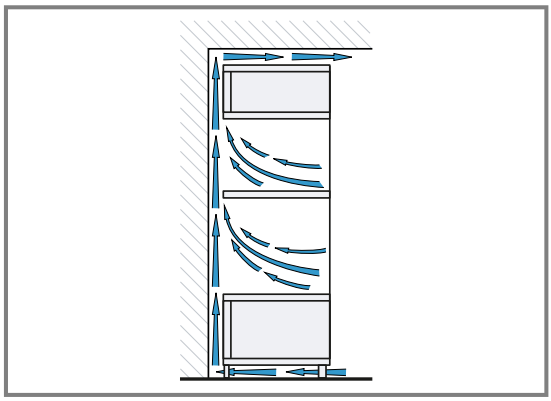

- Only fit appliances up to a height that allows accessories to be easily removed.

29.7 Corner installation

Observe the installation dimensions and the installation instructions when installing in a corner.

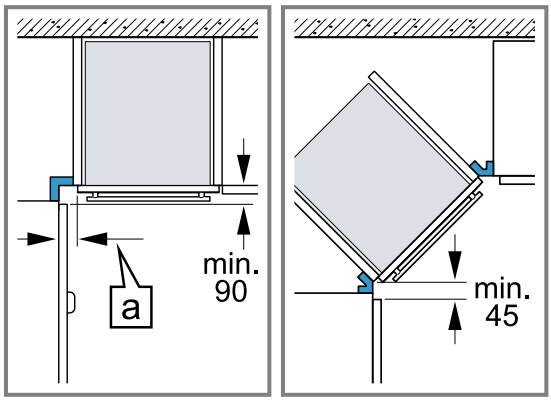

- To ensure that the appliance door can be opened, you must take the minimum dimensions into consideration when installing in a corner. The dimension a is dependent on the thickness of the unit front and the handle.

29.8 Electrical connection

In order to safely connect the appliance to the electrical system, follow these instructions.

- The appliance corresponds to protection class I and must only be operated with a protective earth connection.
- The fuse protection must correspond to the power rating specified on the appliance's rating plate and to local regulations.
- The appliance must be disconnected from the power supply whenever installation work is being carried out.
- The appliance must only be connected using the power cable provided.
- The power cable must be plugged in at the rear of the appliance until you hear a clicking sound. A 3 m power cable can be obtained from the after-sales service.
- The power cable must only be replaced with a cable from the original manufacturer. This is available from after-sales service.

- Contact protection must be guaranteed by the installation.

Electrically connect the appliance with the protective contact plug

Note: The appliance must only be connected to a protective contact socket that has been correctly installed.

- Insert the plug into the protective contact socket. When the appliance is installed, the mains plug of the power cord must be freely accessible. If free access to the mains plug is impossible, an all-pole isolating switch must be integrated into the permanent electrical installation in accordance with the installation regulations.

Electrically connecting an appliance without a protective contact plug

Note: Only a licensed professional may connect the appliance. Damage caused by incorrect connection is not covered under the warranty.
An all-pole isolating switch must be integrated into the permanent electrical installation according to the installation regulations.

1. Identify the phase and neutral conductors in the socket.
   The appliance may be damaged if it is not connected correctly.
2. Connect the hob in accordance with the connection diagram.
   See the rating plate for the voltage.
3. Connect the wires of the mains power cable according to the colour coding:
   – Green/yellow = Protective conductor ⏚
   – Blue = Neutral conductor
   – Brown = Phase (external conductor)

29.9 Installing the appliance

1. Slide the appliance in fully and centre it.

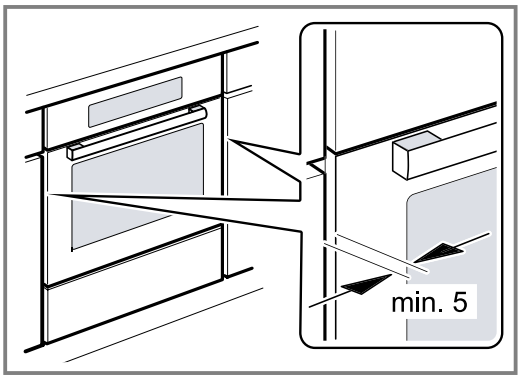

2. Screw the appliance into place.

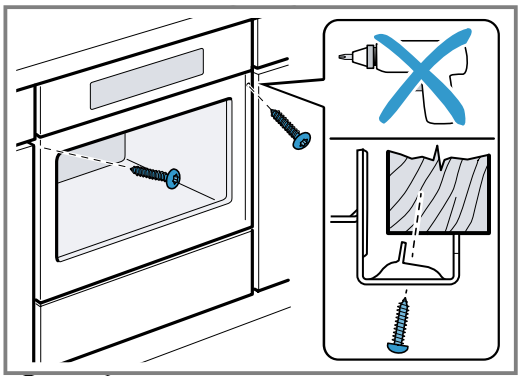

3. For handleless kitchens with vertical bar handle strips:
   – Attach a suitable filling piece ① in order to cover any sharp edges and to guarantee a safe installation.
   – Pre-drill aluminium profiles to establish a screw connection ②.
   – Secure the appliance using a suitable screw ③.

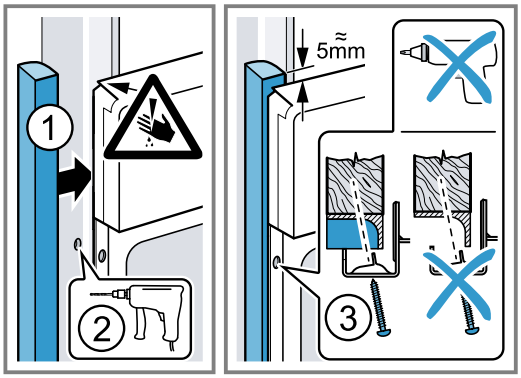

Note: The gap between the worktop and the appliance must not be closed by additional battens.
Thermal insulation strips must not be fitted to the side panels of the surround unit.

29.10 Removing the appliance

1. Disconnect the appliance from the power supply.
2. Undo the fastening screws.
3. Lift the appliance slightly and pull it out completely.

BSH Hausgeräte GmbH
Carl-Wery-Straße 34
81739 München, GERMANY
www.siemens-home.bsh-group.com

Valid within Great Britain:
Imported to Great Britain by
BSH Home Appliances Ltd.
Grand Union House
Old Wolverton Road
Wolverton, Milton Keynes
MK12 5PT
United Kingdom

Manufactured by BSH Hausgeräte GmbH under the trademark licence of Siemens AG

9001617767 (020110)
en